BAY CRANE

www.baycrane.com

65 ton

Demag AC55
Load Charts

TEREX | DEMAG

AC 55 City | All Terrain Crane 65 t Lifting Capacity

AC 55 City

ALL TERRAIN CRANE

AC 55 City

HIGHLIGHTS

- 7-section 131.2 ft boom with Unimec telescoping and pinning system giving enormous 176.5 ft boom-and-jib length with the 45.3 ft boom extension fitted
- With optional insert for the jib extension a system length of 197 ft can be reached
- Very compact – total length < 30 ft
- Fast on the road and exceptionally maneuverable off road
- 16.00 R 25 or 20.5 R 25 tires on request

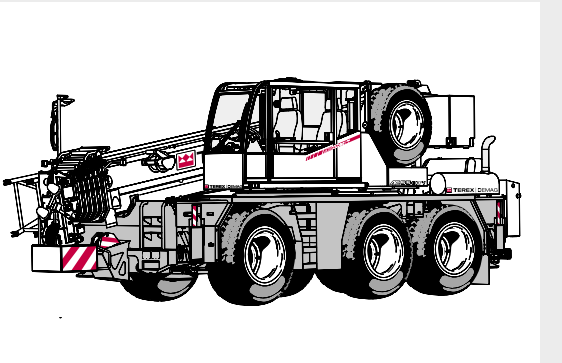

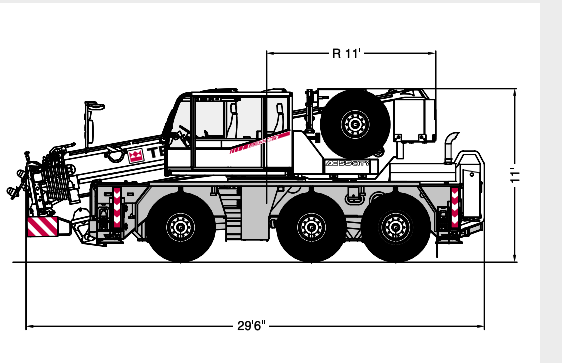

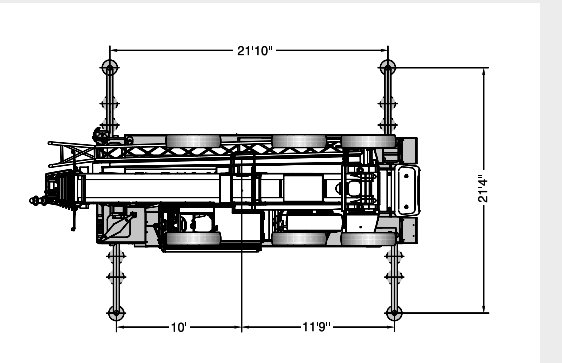

CONTENTS

Page:

Specifications 1
Dimensions 4
Specifications 6

Main boom 2
Working ranges 7
Lifting capacities 8

Main boom extension 3
Working ranges 12
Lifting capacities 13
Working ranges 15

Runner 4
Runner for workshop applications 16
Lifting capacities 17

Technical description 5
Carrier · Superstructure · Optional equipment 19

DIMENSIONS

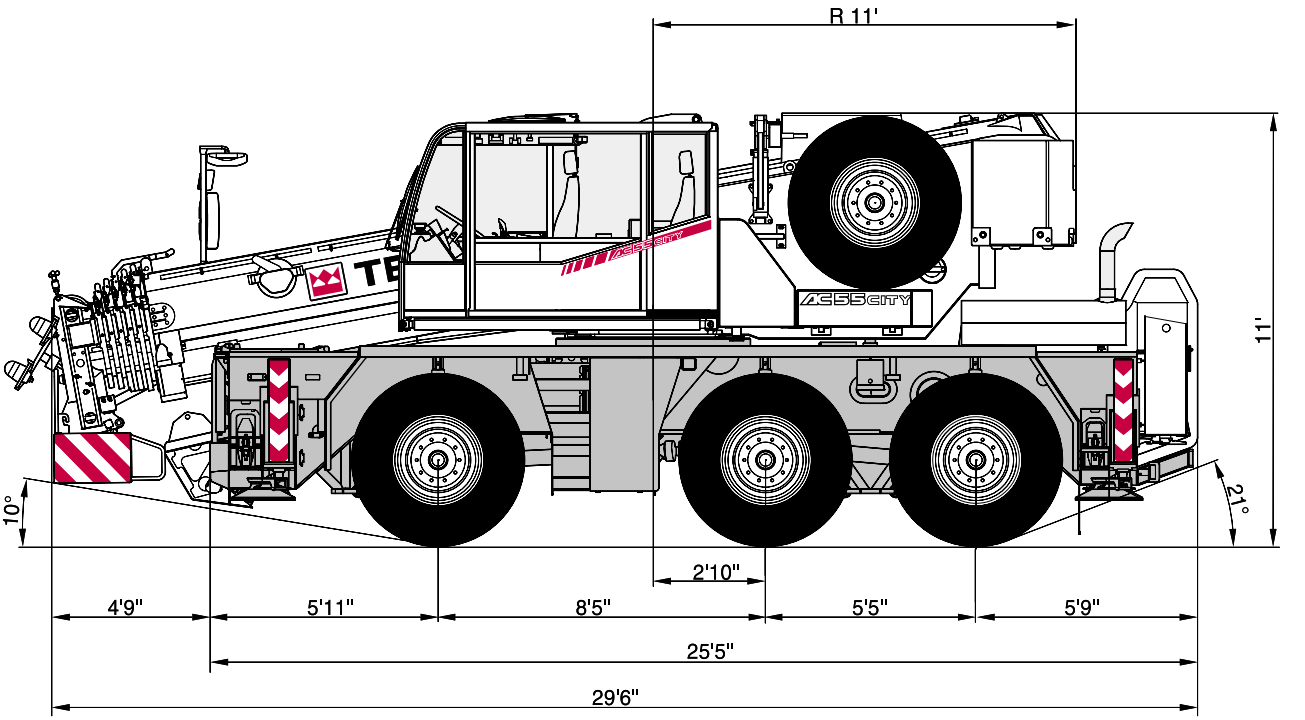

DIMENSIONS

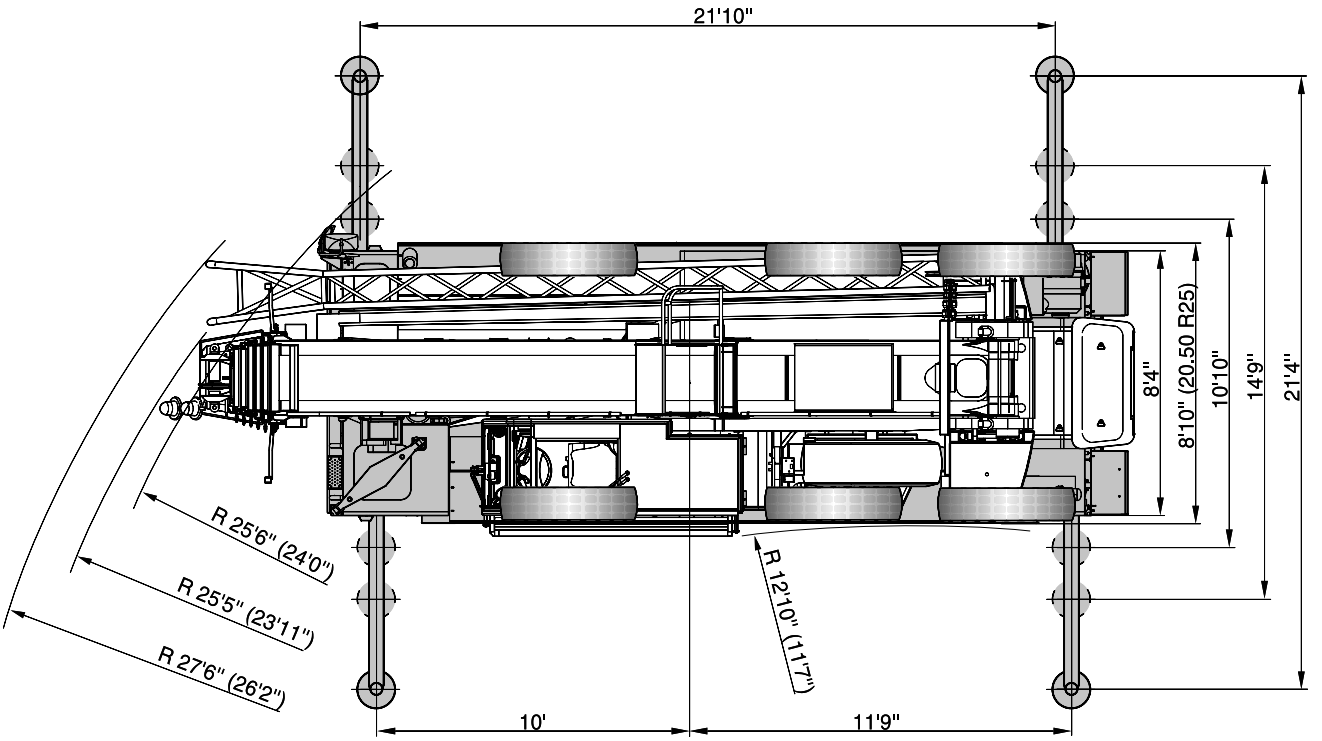
R 25'6" (24'0")
R 25'5" (23'11")
R 27'6" (26'2")
10'
R 12'10" (11'7")
11'9"
8'4"
8'10" (20.50 R25)
10'10"
14'9"
21'4"
21'10"

SPECIFICATIONS

AXLE LOADS

Crane with main boom, 45.3 ft main boom extension, counterweight 7,900 lb, tires 16.00 R 25, hook block, drive 6 x 6 x 6 + Telma brake retarder

Axles	Axle 1	26,500 lb
	Axle 2 + 3	26,500 lb
Total		79,500 lb

WORKING SPEEDS (INFINITELY VARIABLE)

Mechanisms	Normal speed	High speed	Max. permissible line pull[1]	Rope diameter / Rope length
Hoist I	197 ft / min	361 ft / min	9,500 lb	0.63” / 591 ft
Slewing				max. 1.8 1/min
Telescoping speed				25.4 – 131.2 ft: 300 s
Boom elevation				–10,3° – +78°: 50 s

CARRIER PERFORMANCE

Travel speed	0 . . 50 / 53 mph[2]
Gradeability in travel order	> 60 %
Ground clearance	16’ / 18’[2]

HOOK BLOCK / HEAVY-LIFT ATTACHMENT

Type	Possible load[1]	Number of sheaves	Weight	„D“	Number of lines	Heavy-lift attachment
63	119,500 lb	6	1,060 lb	6.6 ft	13	2 add’l. sheaves
32	66,150 lb	3	770 lb	4.3 ft	7	
16	28,900 lb	1	500 lb	3.6 ft	3	
5	9,700 lb	Single line hook	290 lb	2.6 ft	1	

Remarks

[1] varies depending on national regulations

[2] depending on type of tires

WORKING RANGES MAIN BOOM

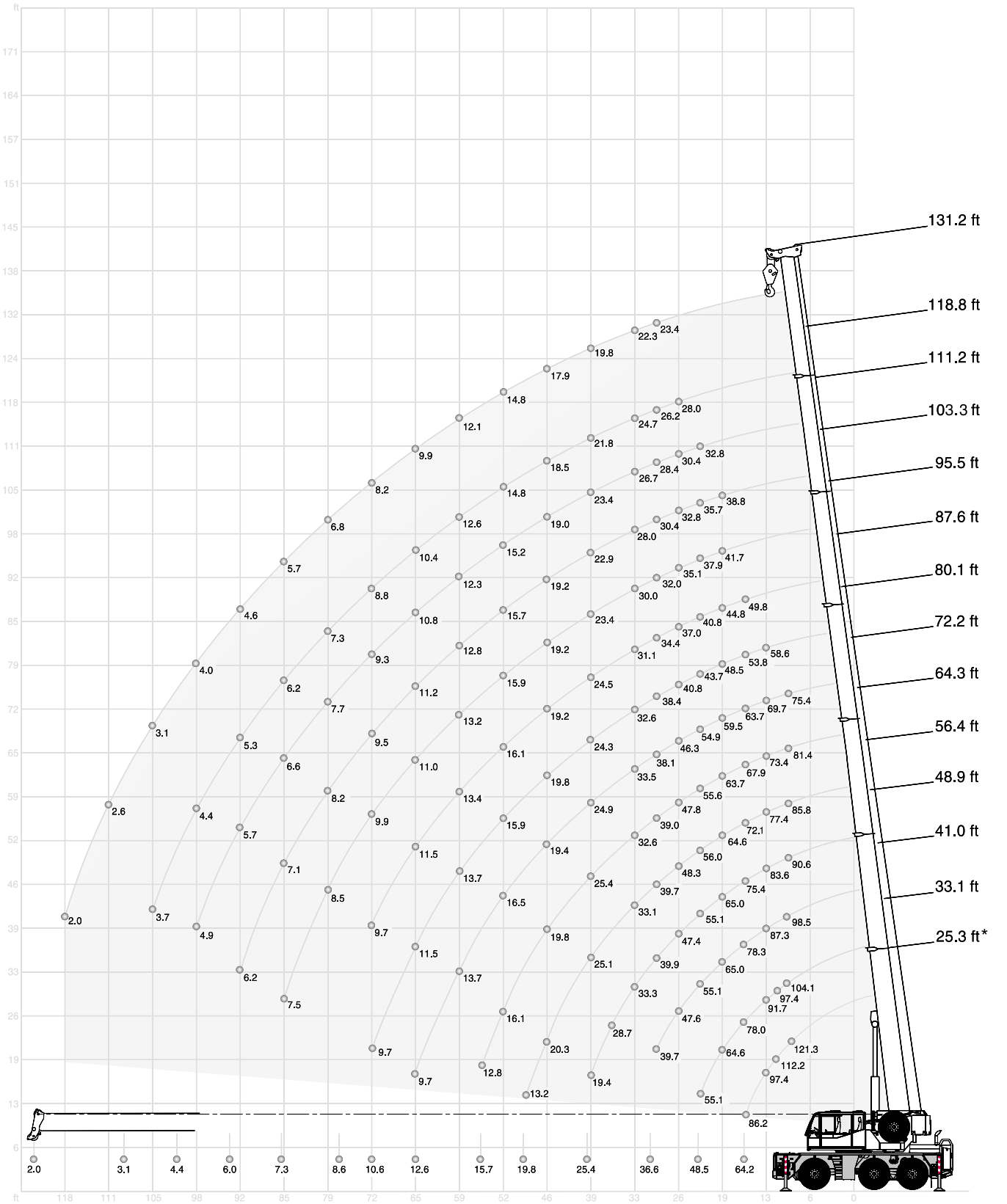

LIFTING CAPACITIES MAIN BOOM

19,400 lb | 21.8 ft x 21.3 ft | 360° | 85 %

Radius	ft	Main boom 25.3*	25.3	33.1	41.0	48.9	56.4	64.3	72.2	80.1	87.6	95.5	103.3	111.2	118.8	131.2	Radius
ft									1,000 lb								ft
		130.0**	-	-	-	-	-	-	-	-	-	-	-	-	-	-	
10		121.3	109.8	104.1	98.5	90.6	85.8	81.4	75.4	-	-	-	-	-	-	-	10
12		112.2	100.3	97.4	92.6	86.6	81.6	76.9	73.4	-	-	-	-	-	-	-	12
13		97.4	91.5	91.7	87.3	83.6	77.4	73.4	69.7	58.6	-	-	-	-	-	-	13
15		86.2	82.5	85.1	82.5	79.6	74.5	70.3	66.6	56.2	52.5	-	-	-	-	-	15
16		-	-	78.0	78.3	75.4	72.1	67.9	63.7	53.8	49.8	-	-	-	-	-	16
20		-	-	64.6	65.0	65.0	64.6	63.7	59.5	48.5	44.8	41.7	38.8	-	-	-	20
23		-	-	55.1	55.1	55.1	56.0	55.6	54.9	43.7	40.8	37.9	35.7	32.8	-	-	23
26		-	-	-	47.6	47.4	48.3	47.8	46.3	40.8	37.0	35.1	32.8	30.4	28.0	-	26
30		-	-	-	39.7	39.9	39.7	39.0	38.1	38.4	34.4	32.0	30.4	28.4	26.2	23.4	30
33		-	-	-	-	33.3	33.1	32.6	33.5	32.6	31.1	30.0	28.0	26.7	24.7	22.3	33
36		-	-	-	-	28.7	28.2	29.1	28.7	27.8	26.9	26.5	26.2	24.9	23.1	20.9	36
39		-	-	-	-	19.4	25.1	25.4	24.9	24.3	24.5	23.4	22.9	23.4	21.8	19.8	39
43		-	-	-	-	-	22.7	22.3	21.8	22.3	21.6	20.5	21.2	20.5	20.7	19.0	43
46		-	-	-	-	-	20.3	19.8	19.4	19.8	19.2	19.2	19.2	19.0	18.5	17.9	46
49		-	-	-	-	-	13.2	17.9	18.1	17.6	17.4	17.6	17.2	16.8	16.5	16.5	49
53		-	-	-	-	-	-	16.1	16.5	15.9	16.1	15.9	15.7	15.2	14.8	14.8	53
56		-	-	-	-	-	-	12.8	15.0	14.6	14.8	14.6	14.1	13.7	13.4	13.4	56
59		-	-	-	-	-	-	-	13.7	13.7	13.4	13.2	12.8	12.3	12.6	12.1	59
62		-	-	-	-	-	-	-	10.1	12.6	12.3	12.1	12.1	11.7	11.5	11.0	62
66		-	-	-	-	-	-	-	9.7	11.5	11.5	11.0	11.2	10.8	10.4	9.9	66
72		-	-	-	-	-	-	-	-	9.7	9.7	9.9	9.5	9.3	8.8	8.2	72
79		-	-	-	-	-	-	-	-	-	-	8.6	8.2	7.7	7.3	6.8	79
85		-	-	-	-	-	-	-	-	-	-	7.5	7.1	6.6	6.2	5.7	85
92		-	-	-	-	-	-	-	-	-	-	-	6.2	5.7	5.3	4.6	92
98		-	-	-	-	-	-	-	-	-	-	-	-	4.9	4.4	4.0	98
105		-	-	-	-	-	-	-	-	-	-	-	-	-	3.7	3.1	105
112		-	-	-	-	-	-	-	-	-	-	-	-	-	-	2.6	112
118		-	-	-	-	-	-	-	-	-	-	-	-	-	-	2.0	118
Capacities[1)]		64.2	64.2	48.5	36.6	25.4	19.8	15.7	12.6	10.6	8.6	7.3	6.0	4.4	3.1	2.0	Capacities[1)]

Remarks

* over rear

** with special attachment

1) with horizontal boom

LIFTING CAPACITIES MAIN BOOM

7,900 lb | 21.8 ft x 21.3 ft | 360° | 85 %

Radius	ft	25.3	33.1	41.0	48.9	56.4	64.3	72.2	80.1	87.6	95.5	103.3	111.2	118.8	131.2	Radius
		Main boom														
ft		1,000 lb														ft
10		109.1	104.1	98.5	90.6	85.8	81.4	75.4	-	-	-	-	-	-	-	10
12		98.8	97.4	92.6	86.6	81.6	76.9	73.4	-	-	-	-	-	-	-	12
13		90.2	91.3	87.3	83.6	77.4	73.4	69.7	58.6	-	-	-	-	-	-	13
15		80.5	81.6	81.8	79.6	74.5	70.3	66.6	56.2	52.5	-	-	-	-	-	15
16		-	73.4	73.2	73.9	72.1	67.9	63.7	53.8	49.8	-	-	-	-	-	16
20		-	60.6	60.8	60.8	61.7	58.0	54.2	48.5	44.8	41.7	38.8	-	-	-	20
23		-	47.2	48.7	49.2	48.9	46.3	43.2	42.8	39.0	37.7	35.7	32.8	-	-	23
26		-	-	37.7	38.1	37.9	37.3	37.7	35.5	33.1	32.4	30.9	30.4	28.0	-	26
30		-	-	30.6	30.9	30.6	31.5	30.9	30.2	29.8	27.6	27.3	26.5	26.0	23.4	30
33		-	-	-	25.6	26.7	26.2	25.8	26.2	25.6	24.9	24.5	23.6	22.5	21.8	33
36		-	-	-	22.5	22.7	22.5	22.7	22.3	21.8	22.3	21.8	20.7	19.8	19.2	36
39		-	-	-	19.4	19.6	19.6	19.8	19.2	19.6	19.2	19.0	18.3	17.9	17.0	39
43		-	-	-	-	17.4	17.6	17.2	17.4	17.2	16.8	16.8	16.3	16.1	15.0	43
46		-	-	-	-	15.7	15.4	15.4	15.4	15.2	14.8	15.0	14.6	14.1	13.4	46
49		-	-	-	-	13.2	14.1	13.9	13.7	13.4	13.7	13.4	13.0	12.6	11.9	49
53		-	-	-	-	-	12.8	12.6	12.6	12.1	12.3	11.9	11.7	11.0	10.6	53
56		-	-	-	-	-	11.5	11.2	11.2	11.0	11.0	10.8	10.4	9.9	9.5	56
59		-	-	-	-	-	-	10.4	10.1	9.9	10.1	9.7	9.3	8.8	8.4	59
62		-	-	-	-	-	-	9.5	9.3	9.0	9.0	8.8	8.4	7.9	7.5	62
66		-	-	-	-	-	-	8.8	8.6	8.2	8.4	7.9	7.7	7.1	6.6	66
72		-	-	-	-	-	-	-	7.3	6.8	7.1	6.6	6.2	5.7	5.3	72
79		-	-	-	-	-	-	-	-	-	5.7	5.5	5.1	4.6	4.2	79
85		-	-	-	-	-	-	-	-	-	4.9	4.4	4.2	3.7	3.1	85
92		-	-	-	-	-	-	-	-	-	-	3.7	3.3	2.9	2.4	92
98		-	-	-	-	-	-	-	-	-	-	-	2.6	2.2	1.8	98
105		-	-	-	-	-	-	-	-	-	-	-	-	1.8	-	105
112		-	-	-	-	-	-	-	-	-	-	-	-	-	-	112
Capacities[1)]		64.2	46.5	28.4	20.1	15.2	11.9	9.5	7.5	6.0	4.9	3.5	2.2	1.3	-	Capacities[1)]

Remarks

1) with horizontal boom

LIFTING CAPACITIES MAIN BOOM

19,400 lb | 21.8 ft x 14.8 ft | 360° | **85 %**

Radius ft	25.3	33.1	41.0	48.9	56.4	64.3	72.2	80.1	87.6	95.5	103.3	111.2	118.8	131.2	Radius ft
	Main boom														
	1,000 lb														
10	100.5	101.6	98.5	90.6	85.8	81.4	75.4	-	-	-	-	-	-	-	10
12	90.4	91.5	91.7	86.6	81.6	76.9	73.4	-	-	-	-	-	-	-	12
13	81.8	83.3	83.1	83.6	77.4	73.4	69.4	58.6	-	-	-	-	-	-	13
15	72.3	75.4	75.8	74.3	71.2	65.7	60.2	55.8	52.5	-	-	-	-	-	15
16	-	61.3	62.2	62.4	61.9	57.3	52.9	49.8	46.5	-	-	-	-	-	16
20	-	43.7	44.8	45.2	45.0	44.3	44.5	41.4	38.1	37.0	35.5	-	-	-	20
23	-	33.3	34.8	34.6	35.3	35.5	34.8	34.4	33.5	31.7	30.4	29.8	-	-	23
26	-	-	28.0	28.7	28.9	28.7	28.7	28.4	28.0	27.8	27.1	25.6	24.3	-	26
30	-	-	23.4	23.8	24.0	24.3	24.0	23.8	24.0	23.6	23.1	22.3	21.6	20.1	30
33	-	-	-	20.3	20.5	20.7	20.5	20.5	20.3	20.1	19.8	19.8	19.0	17.6	33
36	-	-	-	17.6	17.9	18.1	17.9	17.6	17.6	17.6	17.4	17.0	16.5	15.7	36
39	-	-	-	15.4	15.7	15.9	15.7	15.7	15.2	15.4	15.2	14.8	14.3	13.9	39
43	-	-	-	-	13.9	13.9	13.9	13.9	13.4	13.7	13.4	13.0	12.6	12.1	43
46	-	-	-	-	12.6	12.6	12.6	12.3	11.9	12.1	11.9	11.5	11.2	10.8	46
49	-	-	-	-	11.2	11.2	11.2	11.0	10.8	10.8	10.6	10.4	9.9	9.5	49
53	-	-	-	-	-	10.1	10.1	9.9	9.7	9.7	9.5	9.3	8.8	8.4	53
56	-	-	-	-	-	9.3	9.3	9.0	8.8	8.8	8.6	8.4	7.9	7.5	56
59	-	-	-	-	-	-	8.4	8.2	7.9	8.2	7.7	7.5	7.1	6.6	59
62	-	-	-	-	-	-	7.7	7.5	7.3	7.3	7.1	6.8	6.4	6.0	62
66	-	-	-	-	-	-	7.1	6.8	6.6	6.6	6.4	6.2	5.7	5.3	66
72	-	-	-	-	-	-	-	5.7	5.5	5.7	5.3	5.1	4.6	4.4	72
79	-	-	-	-	-	-	-	-	-	4.9	4.4	4.2	4.0	3.5	79
85	-	-	-	-	-	-	-	-	-	4.2	3.7	3.5	3.1	2.6	85
92	-	-	-	-	-	-	-	-	-	-	3.3	2.9	2.4	2.0	92
98	-	-	-	-	-	-	-	-	-	-	-	2.4	2.0	1.3	98
105	-	-	-	-	-	-	-	-	-	-	-	-	1.3	-	105
112	-	-	-	-	-	-	-	-	-	-	-	-	-	-	112
Capacities[1)]	64.2	32.8	21.6	15.7	12.1	9.5	7.7	6.2	4.9	4.0	3.1	2.0	-	-	Capacities[1)]

7,900 lb | 21.8 ft x 10.8 ft | 360° | **85 %**

Radius ft	25.3	33.1	41.0	48.9	56.4	64.3	72.2	80.1	87.6	95.5	103.3	111.2	118.8	131.2	Radius ft
	Main boom														
	1,000 lb														
10	76.3	75.4	70.8	65.0	58.9	54.0	50.5	-	-	-	-	-	-	-	10
12	54.0	58.2	57.3	53.6	48.9	47.0	43.9	-	-	-	-	-	-	-	12
13	41.0	44.8	46.7	45.2	43.7	40.3	38.6	36.4	-	-	-	-	-	-	13
15	32.8	35.9	37.9	38.8	37.9	36.2	34.0	32.2	30.2	-	-	-	-	-	15
16	-	29.8	31.5	32.6	32.8	32.2	30.4	28.7	27.1	-	-	-	-	-	16
20	-	21.6	23.6	24.3	24.7	24.7	24.5	23.4	22.0	21.4	20.1	-	-	-	20
23	-	16.8	18.3	19.0	19.4	19.4	19.4	19.2	18.5	17.9	16.8	15.4	-	-	23
26	-	-	14.8	15.2	15.7	15.7	15.9	15.7	15.2	15.2	14.3	13.2	12.1	-	26
30	-	-	12.1	12.6	13.0	13.0	13.2	13.0	12.6	12.8	12.3	11.2	10.4	9.3	30
33	-	-	-	10.6	11.0	11.0	11.0	10.8	10.6	10.8	10.4	9.7	8.8	7.7	33
36	-	-	-	9.0	9.5	9.5	9.5	9.3	9.0	9.3	8.8	8.4	7.5	6.6	36
39	-	-	-	7.9	8.2	8.2	8.2	7.9	7.7	7.9	7.5	7.3	6.6	5.7	39
43	-	-	-	-	7.1	7.1	7.3	7.1	6.6	6.8	6.6	6.2	5.5	4.9	43
46	-	-	-	-	6.2	6.2	6.4	6.2	5.7	6.0	5.7	5.3	4.9	4.0	46
49	-	-	-	-	5.5	5.5	5.5	5.3	5.1	5.3	4.9	4.6	4.2	3.3	49
53	-	-	-	-	-	4.9	4.9	4.6	4.4	4.6	4.2	4.0	3.5	2.6	53
56	-	-	-	-	-	4.4	4.4	4.2	4.0	4.0	3.7	3.5	2.9	2.2	56
59	-	-	-	-	-	-	3.7	3.7	3.3	3.5	3.3	2.9	2.4	1.8	59
62	-	-	-	-	-	-	3.5	3.3	3.1	3.1	2.9	2.4	2.0	-	62
66	-	-	-	-	-	-	3.1	2.9	2.6	2.6	2.4	2.0	1.5	-	66
72	-	-	-	-	-	-	-	2.2	2.0	2.0	1.8	-	-	-	72
79	-	-	-	-	-	-	-	-	-	1.3	-	-	-	-	79
85	-	-	-	-	-	-	-	-	-	-	-	-	-	-	85
Capacities[1)]	30.9	16.5	11.0	7.9	6.0	4.4	3.3	2.4	1.5	-	-	-	-	-	Capacities[1)]

LIFTING CAPACITIES MAIN BOOM

7,900 lb | 0° / 180° | 85 %

Radius	ft	25.3	33.1	41.0	48.9	56.4	64.3	72.2	Radius
					Main boom				
ft					1,000 lb				ft
10		40.1	42.1	43.4	43.9	44.1	44.3	44.1	10
12		35.3	37.3	38.6	39.2	39.5	39.5	38.4	12
13		31.3	33.5	34.8	35.3	35.5	35.7	34.0	13
15		28.0	30.2	31.5	32.0	32.2	31.5	30.0	15
16		-	26.5	28.4	29.1	29.5	28.2	26.7	16
20		-	19.2	20.9	21.4	22.0	22.0	21.8	20
23		-	14.6	16.1	16.8	17.2	17.2	17.2	23
26		-	-	13.0	13.4	13.9	13.9	13.9	26
30		-	-	10.6	11.0	11.5	11.5	11.5	30
33		-	-	-	9.3	9.7	9.7	9.7	33
36		-	-	-	7.9	8.4	8.4	8.4	36
39		-	-	-	6.8	7.3	7.3	7.3	39
43		-	-	-	-	6.4	6.4	6.6	43
46		-	-	-	-	5.7	5.7	5.7	46
49		-	-	-	-	5.1	5.1	5.1	49
53		-	-	-	-	-	4.6	4.6	53
56		-	-	-	-	-	4.0	4.0	56
59		-	-	-	-	-	-	3.5	59
62		-	-	-	-	-	-	3.1	62
66		-	-	-	-	-	-	2.9	66
72		-	-	-	-	-	-	-	72
Capacities[1)]		27.1	14.6	9.7	6.8	5.5	4.2	3.1	Capacities[1)]

Remarks

1) with horizontal boom

WORKING RANGES MAIN BOOM EXTENSION

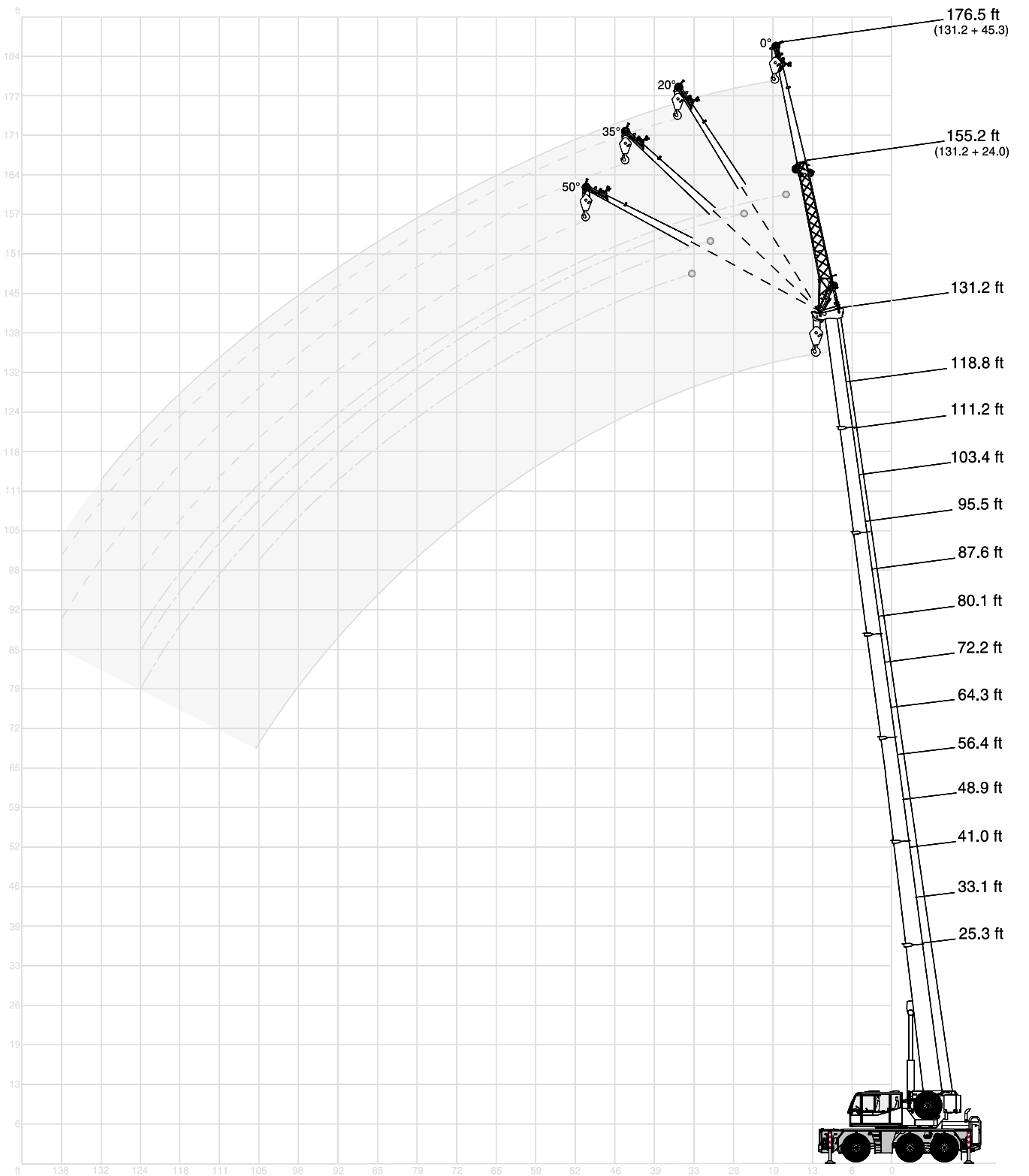

LIFTING CAPACITIES MAIN BOOM EXTENSION

19,400 lb | 21.8 ft x 21.3 ft | 360° | **85 %**

118.8 ft Main boom

Radius	Extension 24.0 ft 0°	20°	35°	50°	45.3 ft 0°	20°	35°	50°
ft	1,000 lb							
33	17.6	-	-	-	-	-	-	-
36	16.8	-	-	-	9.0	-	-	-
39	16.1	13.9	-	-	8.8	-	-	-
43	15.4	13.7	-	-	8.8	-	-	-
46	14.8	13.4	11.7	9.9	8.6	-	-	-
49	14.1	13.0	11.5	9.9	8.4	-	-	-
53	13.4	12.6	11.5	9.9	8.2	6.6	-	-
56	13.0	12.1	11.2	9.7	7.9	6.4	-	-
59	12.3	11.9	11.0	9.7	7.7	6.4	5.7	-
62	11.0	11.5	11.0	9.7	7.5	6.2	5.5	-
66	10.1	10.8	10.6	9.7	7.3	6.2	5.5	4.9
72	8.8	9.0	9.3	9.5	7.1	6.0	5.3	4.6
79	7.3	7.9	7.9	7.9	6.6	5.7	5.3	4.6
85	6.2	6.6	6.8	7.1	6.4	5.5	5.1	4.6
92	5.1	5.5	5.7	5.7	5.7	5.3	5.1	4.6
98	4.4	4.6	4.9	4.9	4.9	5.1	4.9	4.6
105	3.5	3.7	4.0	-	4.0	4.6	4.9	4.6
112	2.9	3.1	3.3	-	3.3	4.0	4.2	4.4
118	2.4	2.6	-	-	2.9	3.3	3.5	3.7
125	2.0	2.0	-	-	2.4	2.6	2.9	-
131	1.5	-	-	-	2.0	2.2	2.4	-
138	-	-	-	-	1.5	1.8	2.0	-
144	-	-	-	-	-	1.3	-	-

131.2 ft Main boom

Radius	Extension 24.0 ft 0°	20°	35°	50°	45.3 ft 0°	20°	35°	50°
ft	1,000 lb							
39	13.7	-	-	-	-	-	-	-
43	13.4	-	-	-	8.2	-	-	-
46	13.0	12.3	-	-	7.9	-	-	-
49	12.6	12.1	11.2	-	7.7	-	-	-
53	12.3	11.7	11.0	9.7	7.7	-	-	-
56	11.9	11.2	11.0	9.7	7.5	-	-	-
59	11.5	11.0	10.6	9.5	7.3	6.2	-	-
62	11.0	10.6	10.4	9.5	7.3	6.0	-	-
66	9.9	10.1	10.1	9.5	7.1	6.0	5.3	-
72	8.4	8.8	9.3	9.3	6.8	5.7	5.3	4.6
79	6.8	7.5	7.7	7.9	6.6	5.5	5.1	4.6
85	5.7	6.2	6.4	6.6	6.2	5.5	5.1	4.6
92	4.6	5.1	5.3	5.5	5.1	5.3	4.9	4.6
98	3.7	4.2	4.4	4.4	4.2	5.1	4.9	4.6
105	3.1	3.3	3.5	3.5	3.5	4.2	4.6	4.6
112	2.4	2.6	2.9	-	2.9	3.5	3.7	4.0
118	2.0	2.2	2.2	-	2.4	2.9	3.1	3.3
125	1.5	1.5	1.8	-	1.8	2.4	2.6	2.6
131	-	-	-	-	1.5	1.8	2.0	-
138	-	-	-	-	-	1.3	1.5	-
144	-	-	-	-	-	-	-	-
151	-	-	-	-	-	-	-	-
158	-	-	-	-	-	-	-	-

7,900 | 21.8 ft x 21.3 ft | 360° | **85 %**

118.8 ft Main boom

Radius	Extension 24.0 ft 0°	20°	35°	50°	45.3 ft 0°	20°	35°	50°
ft	1,000 lb							
33	17.6	-	-	-	-	-	-	-
36	16.8	-	-	-	9.0	-	-	-
39	16.1	13.9	-	-	8.8	-	-	-
43	14.8	13.7	-	-	8.8	-	-	-
46	13.2	13.4	11.7	9.9	8.6	-	-	-
49	11.9	12.8	11.5	9.9	8.4	-	-	-
53	11.0	11.5	11.5	9.9	8.2	6.6	-	-
56	9.9	10.4	11.0	9.7	7.9	6.4	-	-
59	9.0	9.7	9.7	9.7	7.7	6.4	5.7	-
62	8.2	8.8	9.0	9.3	7.5	6.2	5.5	-
66	7.3	7.9	8.2	8.6	7.1	6.2	5.5	4.9
72	5.7	6.4	6.6	6.8	6.2	6.0	5.3	4.6
79	4.6	5.1	5.5	5.5	5.1	5.7	5.3	4.6
85	3.7	4.2	4.4	4.4	4.2	5.1	5.1	4.6
92	2.9	3.3	3.3	3.5	3.3	4.2	4.6	4.6
98	2.2	2.4	2.6	2.6	2.6	3.3	3.7	4.0
105	1.5	1.8	2.0	-	2.0	2.6	2.9	3.1
112	-	-	1.3	-	1.5	2.0	2.4	2.4
118	-	-	-	-	-	1.5	1.8	2.0

131.2 ft Main boom

Radius	Extension 24.0 ft 0°	20°	35°	50°	45.3 ft 0°	20°	35°	50°
ft	1,000 lb							
39	13.7	-	-	-	-	-	-	-
43	13.4	-	-	-	8.2	-	-	-
46	12.6	12.3	-	-	7.9	-	-	-
49	11.2	12.1	11.2	-	7.7	-	-	-
53	10.1	11.0	11.0	9.7	7.7	-	-	-
56	9.0	9.9	10.6	9.7	7.5	-	-	-
59	8.2	9.0	9.5	9.5	7.3	6.2	-	-
62	7.3	8.2	8.6	9.0	7.3	6.0	-	-
66	6.4	7.3	7.7	8.2	6.6	6.0	5.3	-
72	5.1	5.7	6.2	6.6	5.3	5.7	5.3	4.6
79	4.0	4.6	5.1	5.3	4.2	5.3	5.1	4.6
85	3.1	3.5	4.0	4.0	3.3	4.4	5.1	4.6
92	2.4	2.9	3.1	3.1	2.6	3.5	4.0	4.4
98	1.8	2.0	2.2	2.4	2.0	2.9	3.3	3.7
105	-	1.3	1.5	1.5	1.5	2.2	2.6	2.9
112	-	-	-	-	-	1.5	2.0	2.2
118	-	-	-	-	-	-	1.3	1.5
125	-	-	-	-	-	-	-	-
131	-	-	-	-	-	-	-	-

LIFTING CAPACITIES MAIN BOOM EXTENSION

19,400 lb | 21.8 ft x 21.3 ft | 360° | **85 %**

118.8 ft Main boom

Radius	Extension 66.3 ft 0°	20°	35°	50°
ft	1,000 lb			
43	5.5	-	-	-
46	5.3	-	-	-
49	5.3	-	-	-
53	5.1	-	-	-
56	5.1	-	-	-
59	4.9	-	-	-
62	4.6	-	-	-
66	4.6	3.7	-	-
72	4.4	3.7	-	-
79	4.2	3.5	3.1	-
85	4.0	3.3	3.1	2.6
92	3.7	3.3	2.9	2.6
98	3.5	3.1	2.9	2.6
105	3.5	3.1	2.9	2.6
112	3.3	2.9	2.6	2.6
118	2.9	2.9	2.6	2.6
125	2.4	2.9	2.6	2.6
131	2.0	2.6	2.6	2.6
138	1.5	2.2	2.4	2.6
144	-	1.8	2.0	-
151	-	-	1.5	-

131.2 ft Main boom

Radius	Extension 66.3 ft 0°	20°	35°	50°
ft	1,000 lb			
49	4.9	-	-	-
53	4.9	-	-	-
56	4.6	-	-	-
59	4.6	-	-	-
62	4.6	-	-	-
66	4.4	-	-	-
72	4.2	3.5	-	-
79	4.0	3.3	-	-
85	4.0	3.3	2.9	-
92	3.7	3.1	2.9	2.6
98	3.5	3.1	2.9	2.6
105	3.5	3.1	2.6	2.6
112	3.1	2.9	2.6	2.4
118	2.4	2.9	2.6	2.4
125	2.0	2.6	2.6	2.4
131	1.5	2.2	2.6	2.4
138	-	1.8	2.0	2.2
144	-	-	1.5	1.8
151	-	-	-	-
158	-	-	-	-
164	-	-	-	-

7,900 | 21.8 ft x 21.3 ft | 360° | **85 %**

118.8 ft Main boom

Radius	Extension 66.3 ft 0°	20°	35°	50°
ft	1,000 lb			
43	5.5	-	-	-
46	5.3	-	-	-
49	5.3	-	-	-
53	5.1	-	-	-
56	5.1	-	-	-
59	4.9	-	-	-
62	4.6	-	-	-
66	4.6	3.7	-	-
72	4.4	3.7	-	-
79	4.2	3.5	3.1	-
85	4.0	3.3	3.1	2.6
92	3.3	3.3	2.9	2.6
98	2.6	3.1	2.9	2.6
105	2.0	3.1	2.9	2.6
112	1.5	2.4	2.6	2.6
118	-	2.0	2.4	2.6
125	-	1.5	1.8	2.2
131	-	-	1.3	1.5
138	-	-	-	-

131.2 ft Main boom

Radius	Extension 66.3 ft 0°	20°	35°	50°
ft	1,000 lb			
49	4.9	-	-	-
53	4.9	-	-	-
56	4.6	-	-	-
59	4.6	-	-	-
62	4.6	-	-	-
66	4.4	-	-	-
72	4.2	3.5	-	-
79	4.0	3.3	-	-
85	3.3	3.3	2.9	-
92	2.4	3.1	2.9	2.6
98	2.0	3.1	2.9	2.6
105	1.3	2.4	2.6	2.6
112	-	1.8	2.4	2.4
118	-	1.3	2.0	2.4
125	-	-	1.5	1.8
131	-	-	-	-
138	-	-	-	-
144	-	-	-	-
151	-	-	-	-

WORKING RANGES MAIN BOOM EXTENSION

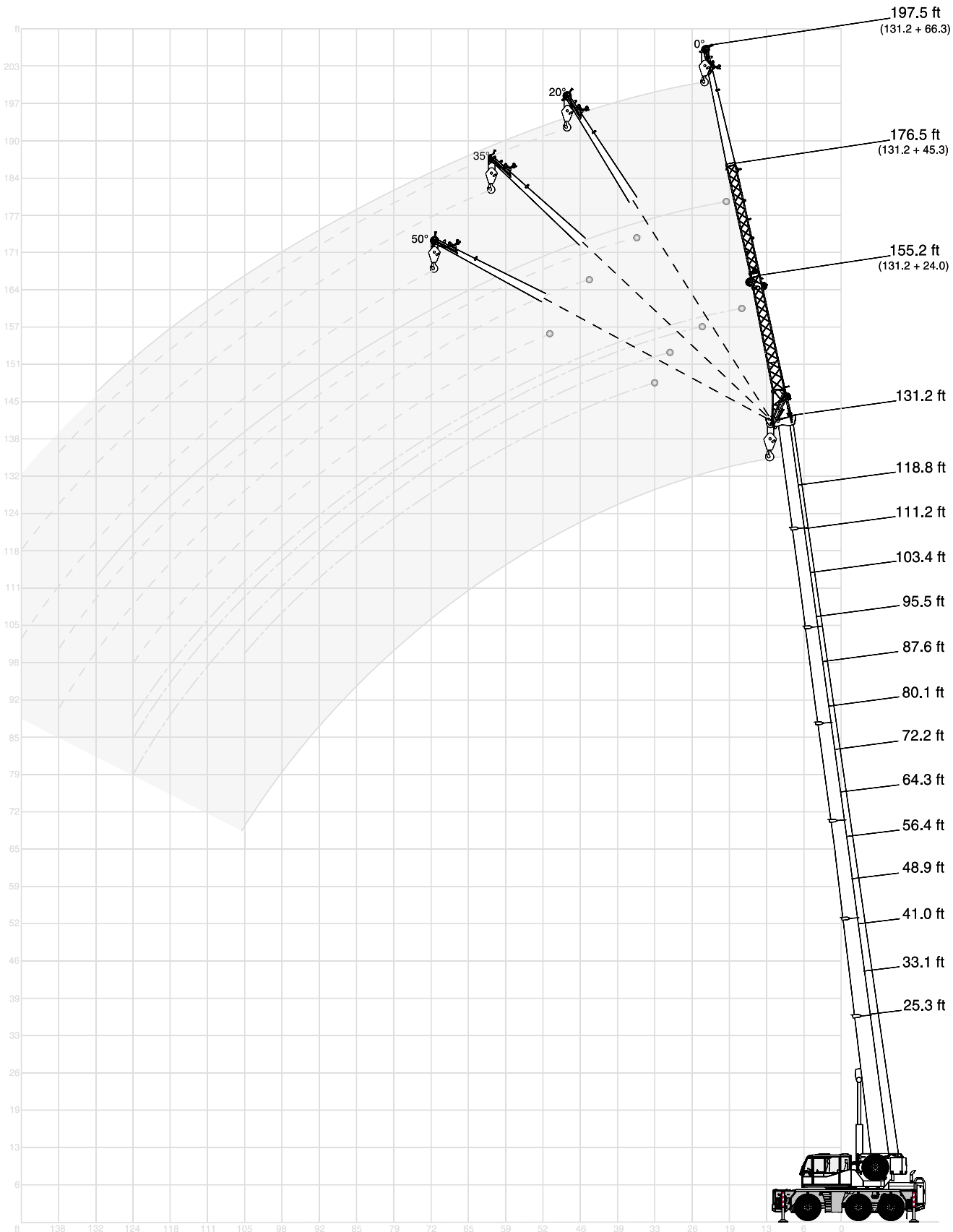

RUNNER FOR WORKSHOP APPLICATIONS

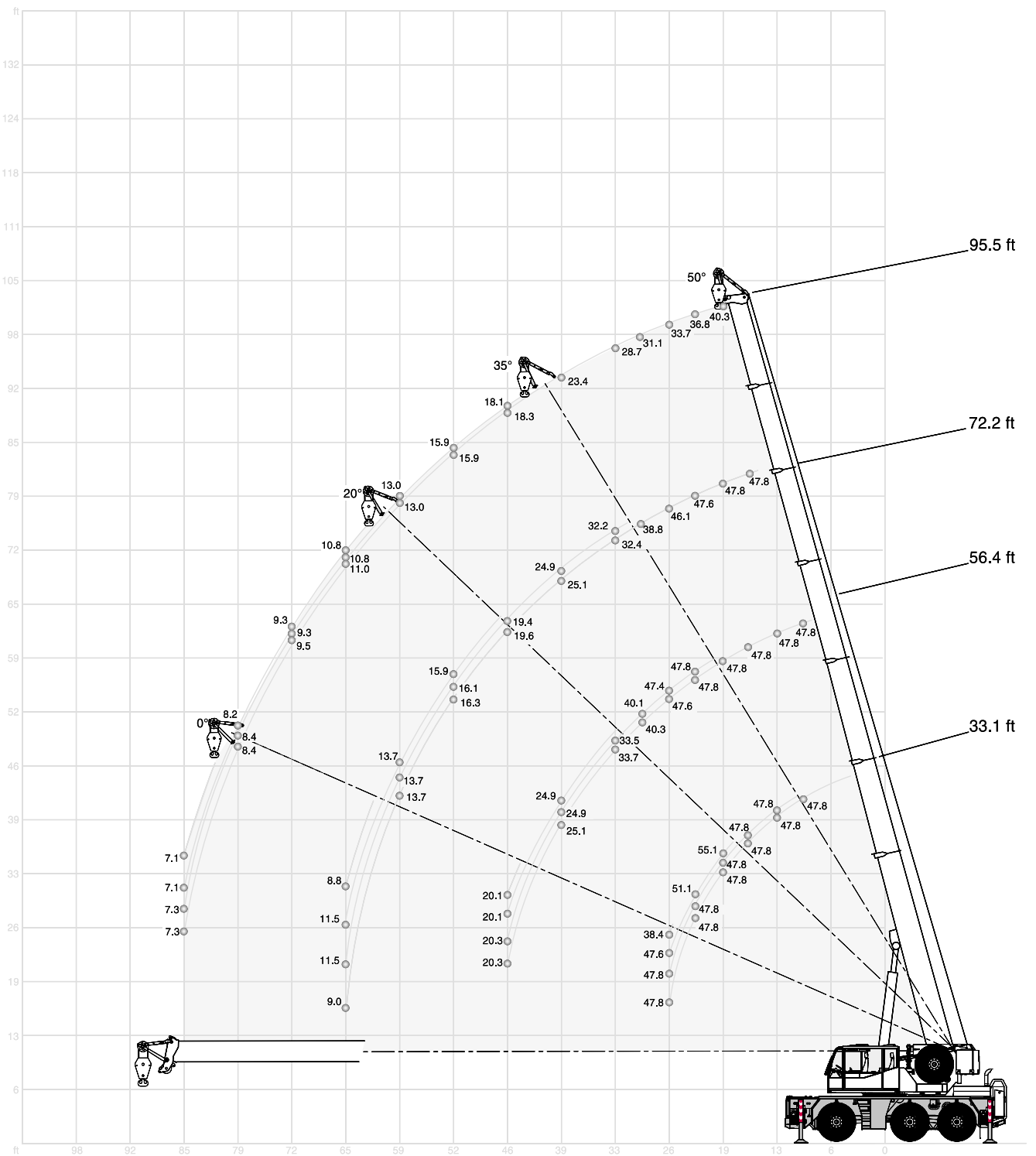

LIFTING CAPACITIES RUNNER

19,400 lb | 21.8 ft x 21.3 ft | 360° | 85 %

33.1 ft Main boom

Radius	Runner 0°	20°	35°	50°
ft	1,000 lb			
10	-	-	47.8	47.8
12	-	-	47.8	47.8
13	-	-	47.8	47.8
15	-	57.1	47.8	47.8
16	-	57.1	47.8	47.8
20	-	55.1	47.8	47.8
23	38.4	51.1	47.8	47.8
26	38.4	47.6	47.8	47.8
30	-	-	-	-
33	-	-	-	-
36	-	-	-	-
39	-	-	-	-
43	-	-	-	-
46	-	-	-	-
49	-	-	-	-
53	-	-	-	-
56	-	-	-	-

56.4 ft Main boom

Radius	Runner 0°	20°	35°	50°
ft	1,000 lb			
10	-	-	-	47.8
12	-	-	-	47.8
13	-	-	-	47.8
15	-	-	-	47.8
16	-	-	47.8	47.8
20	-	-	47.8	47.8
23	-	-	47.8	47.8
26	-	-	47.4	47.6
30	-	39.9	40.1	40.3
33	-	33.5	33.5	33.7
36	-	28.7	28.7	28.9
39	-	24.9	24.9	25.1
43	21.6	21.8	21.8	22.0
46	20.1	20.1	20.3	20.3
49	18.1	18.3	18.3	18.3
53	11.2	11.2	11.5	11.7
56	-	-	-	-

72.2 ft Main boom

Radius	Runner 0°	20°	35°	50°
ft	1,000 lb			
12	-	-	-	47.8
13	-	-	-	47.8
15	-	-	-	47.8
16	-	-	-	47.8
20	-	-	-	47.8
23	-	-	47.8	47.6
26	-	-	45.6	46.1
30	-	-	38.6	38.8
33	-	-	32.2	32.4
36	-	-	28.4	28.2
39	-	24.9	24.9	25.1
43	-	21.8	22.0	22.0
46	-	19.4	19.4	19.6
49	-	17.4	17.4	17.4
53	-	15.9	16.1	16.3
56	14.8	14.8	15.0	15.0
59	13.4	13.7	13.7	13.7
62	12.3	12.6	12.6	12.6
66	8.8	11.5	11.5	9.0

95.5 ft Main boom

Radius	Runner 0°	20°	35°	50°
ft	1,000 lb			
20	-	-	-	40.3
23	-	-	-	36.8
26	-	-	-	33.7
30	-	-	-	31.1
33	-	-	-	28.7
36	-	-	26.2	26.7
39	-	-	23.1	23.4
43	-	-	20.5	20.5
46	-	-	18.1	18.3
49	-	-	17.0	17.2
53	-	-	15.9	15.9
56	-	14.1	14.3	14.3
59	-	13.0	13.0	13.0
62	-	11.7	11.9	11.9
66	-	10.8	10.8	11.0
72	-	9.3	9.3	9.5
79	8.2	8.2	8.4	8.4
85	7.1	7.1	7.3	7.3
92	-	-	-	-

LIFTING CAPACITIES RUNNER

7,900 lb | 21.8 ft x 21.3 ft | 360° | 85 %

33.1 ft Main boom

Radius	Runner 0°	20°	35°	50°
ft	1,000 lb			
10	-	-	47.8	47.8
12	-	-	47.8	47.8
13	-	-	47.8	47.8
15	-	57.1	47.8	47.8
16	-	57.1	47.8	47.8
20	-	57.1	47.8	47.8
23	38.4	47.6	47.8	47.8
26	37.3	37.5	37.7	37.7
30	-	-	-	-
33	-	-	-	-
36	-	-	-	-
39	-	-	-	-
43	-	-	-	-
46	-	-	-	-
49	-	-	-	-
53	-	-	-	-
56	-	-	-	-

56.4 ft Main boom

Radius	Runner 0°	20°	35°	50°
ft	1,000 lb			
10	-	-	-	47.8
12	-	-	-	47.8
13	-	-	-	47.8
15	-	-	-	47.8
16	-	-	47.8	47.8
20	-	-	47.8	47.8
23	-	-	47.8	47.8
26	-	-	38.4	38.6
30	-	30.9	31.1	31.3
33	-	25.6	25.8	26.0
36	-	22.7	22.9	22.9
39	-	19.6	19.8	19.8
43	17.2	17.2	17.4	17.4
46	15.2	15.2	15.4	15.4
49	13.9	13.9	14.1	14.1
53	11.2	11.2	11.5	11.7
56	-	-	-	-

72.2 ft Main boom

Radius	Runner 0°	20°	35°	50°
ft	1,000 lb			
12	-	-	-	47.8
13	-	-	-	47.8
15	-	-	-	47.8
16	-	-	-	47.8
20	-	-	-	47.8
23	-	-	42.8	43.2
26	-	-	35.3	35.7
30	-	-	31.1	31.3
33	-	-	25.8	26.0
36	-	-	22.0	22.0
39	-	19.6	19.8	19.8
43	-	17.2	17.2	17.4
46	-	15.2	15.2	15.4
49	-	13.4	13.9	13.9
53	-	12.3	12.6	12.6
56	11.0	11.2	11.2	11.2
59	10.1	10.1	10.4	10.4
62	9.3	9.3	9.3	9.5
66	8.6	8.6	8.6	8.6

95.5 ft Main boom

Radius	Runner 0°	20°	35°	50°
ft	1,000 lb			
20	-	-	-	40.3
23	-	-	-	36.8
26	-	-	-	31.3
30	-	-	-	27.6
33	-	-	-	24.0
36	-	-	21.4	21.6
39	-	-	19.0	19.2
43	-	-	16.5	16.8
46	-	-	14.6	14.8
49	-	-	13.2	13.4
53	-	-	12.1	12.1
56	-	10.8	10.8	11.0
59	-	9.7	9.7	9.9
62	-	8.8	8.8	9.0
66	-	7.9	8.2	8.2
72	-	6.6	6.6	6.8
79	5.5	5.5	5.5	5.5
85	4.6	4.6	4.6	4.6
92	-	-	-	-

TECHNICAL DESCRIPTION

CARRIER

Drive / steering	6 x 4 x 6.
Frame	Monobox main frame with outrigger boxes integral, of high-strength fine-grain structural steel.
Outriggers	4 hydraulically telescoping outrigger beams with hydraulic jack legs.
Engine	DaimlerChrysler OM 926 LA water-cooled 6-cylinder engine, output to DIN: 240 kW (322 HP), max. torque 1300 Nm at 1300 ^{1}/min. Fuel tank capacity: 87 gallons.
Transmission	Allison automatic transmission with torque-converter, 6 forward speeds and 1 reverse, transfer case with off-road range and longitudinal differential lock-out control.
Axles	Axle 1: non-driving, steering; axle 2: with ext. planetary hubs with transfer case and transverse differential locks, steering for crab steer mode; axle 3: with ext. planetary hubs with transverse differential locks, steering.
Suspension	Hydropneumatic suspension, blockable hydraulically.
Wheels and tires	6 wheels fitted with 14.00 R 25 tires.
Travel speed	53 mph.
Steering	ZF dual-circuit hydraulic steering with mech. steering end stop. 1 engine-driven master steering pump, 1 emergency steering pump. Independent, electronic-hydraulic rear axle steering.
Brakes	Service brake: dual-line air system. Parking brake: spring-loaded type. Sustained action brake: engine exhaust brake and constant decompression valve. ABS as standard.
Electrical equipment	24 V system, 3-phase alternator 100 A, 4 batteries 12 V/100 Ah. Lighting in compliance with EC-directives.

SUPERSTRUCTURE

Main boom	Boom base and 6 telescopic sections, fabricated from fine-grain structural steel, telescoping with partial load, anti-deflection Demag ovaloid design.
Counterweight	19,400 lb, integrated into the superstructure (can be split up in 7,900 lb and 11,500 lb).
Hydraulic system	Powered by carrier engine, 2 variable-displacement axial piston pumps to enable 3 simultaneous, independent working movements, separate fixed-displacement pump for slew unit.
Hoist	Fixed-displacement axial-piston motor, hoist drum with planetary reduction integral and spring-applied multi-disk brake.
Slew unit	Hydraulic motor with planetary gear reducer, pedal-operated service brake and spring-applied holding brake. Slewing speed infinitely variable.
Boom elevation	1 differential cylinder with pilot-controlled lowering brake valve.
Crane cab	Spacious ergonomic cab with sliding door, large folding-out windscreen, roof window with armoured glass, new heated comfortable seat, air suspended, variably adjustable, controls and instrumentation for all crane movements, washer and interval control wiper for windscreen and roof window, air-conditioning as standard.
Safety devices	Electronic safe load indicator with graphic display and digital readout for hook load, rated load, boom length, boom angle and load radius. Integrated display to indicate the percentage of telescoping sequence, limit switches on hoist and lowering motions, pressure-relief and safety holding valves.

OPTIONAL EQUIPMENT

Drive / steering	6 x 6 x 6.
Wheels and tires	16.00 R 25, 17.5 R 25 or 20.5 R 25.
Main boom extension	Side-folding 1 or 2-part jib, 24.0 ft or 45.3 ft. 0°, 20°, 35° and 50° offset, incl. runner 5.2 ft.
Main boom extension insert	21 ft for 197 ft system length.
Heavy-lift attachment	2 additional sheaves on boom head.
Heavy-lift runner	3.3 ft - 5.2 ft long, 3-sheaves with several offset positions for working inside buildings, part of main boom extension.
Passenger seat	
Searcher hook	
Centralized lubrication	
Hoist II	
Reversing camera	
Eddy current retarder	

NOTES TO LIFTING CAPACITY

Ratings are in compliance with ISO 4305 and DIN 15019.2 (test load = 1.25 x suspended load + 0.1 x dead weight of boom head).
Weight of hook blocks and slings is part of the load, and is to be deducted from the capacity ratings.

Crane operation with main boom is permissible up to a

wind pressure of: 1.25 lb/ft^2
wind speed of: 32 ft/s

Consult operation manual for further details.

Note: Data published herein is intended as a guide only and shall not be construed to warrant applicability for lifting purposes.
Crane operation is subject to the computer charts and operation manual both supplied with the crane.

KEY

Counterweight

Lifting capacities on outriggers 360°

Free on wheels

„D“

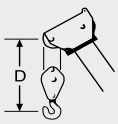

NOTES

NOTES

The information contained in this brochure merely consists of general descriptions and a broad compilation of performance features which might not apply precisely as described under specific application conditions or which may change as a result of further product development.
The desired performance features only become binding once expressly agreed in the final contract.

Subject to change without notice. · Machine operation is subject to computer charts only.

02/05

TEREX | DEMAG

Terex Cranes Wilmington Operations
Mobile hydraulic and lattice-boom cranes
202 Raleigh St. · Wilmington, NC 28412 USA
Phone +1 910 395 8500 · Fax +1 910 395 8538
Email: american@american-crane.com

Order Nr. AC 55 City usa A1 – 201 029 12