HiReach™ H70F

TECHNICAL SPECIFICATIONS

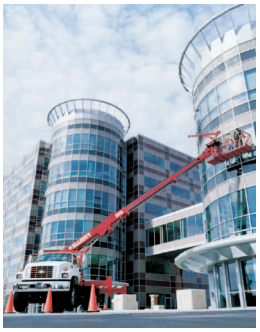

H70F SIDE VIEW DIAGRAM

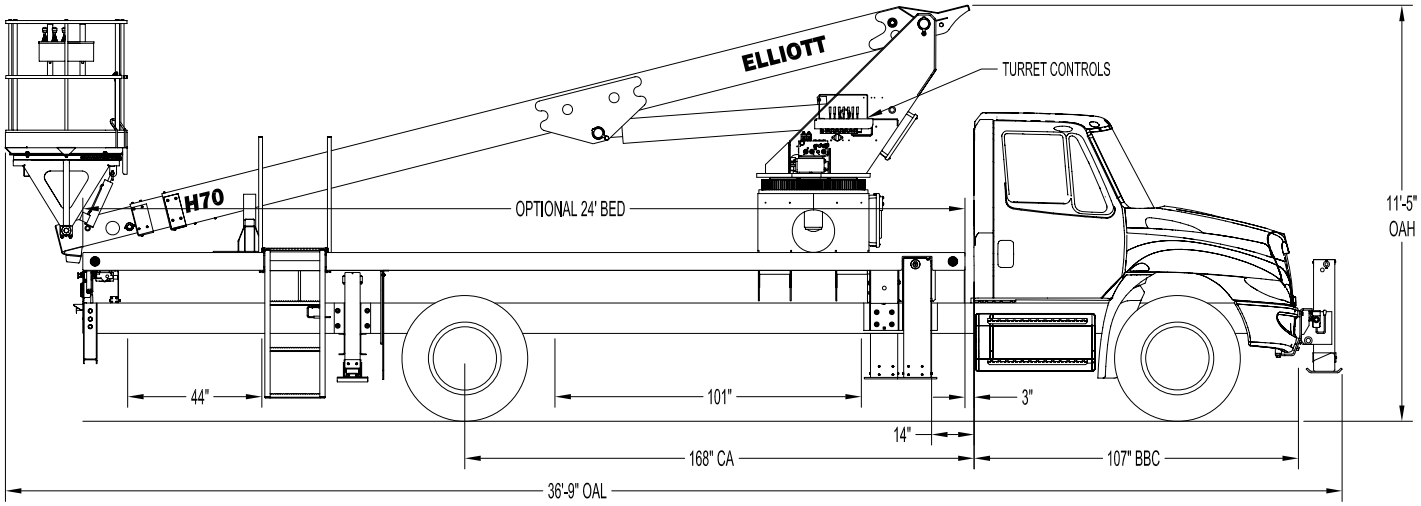

• **Working Height**	75'/23 m
• **Working Side Reach**	56'/17 m
• **Platform Capacity**	600 lbs/272 kg
• **Platform Size**	40x60 in/102x152 cm
• **Platform Type**	Top-Mount
• **Lifting Capacity (Main Winch)**	5,900 lbs /2676 kg
• **Jib Winch**	1,000 lbs/454 kg

• **Powered Boom Sections**	3
• **Overall Height**	11'5"/3,5 m
• **Unit Weight (Bare)**	17,600 lbs/7983 kg
• **Outrigger Spread Main**	18'/5,5 m
• **Outrigger Spread Auxiliary**	8'/2,4 m
• **Front Gross Axle Weight Rating**	13,000 lbs/5897 kg
• **Rear Gross Axle Weight Rating**	20,000 lbs/9072 kg

ELLIOTT EQUIPMENT COMPANY

Elliott Equipment Company
4427 South 76th Circle
Omaha, NE 68127

Phone: 402-592-4500
Fax: 402-592-4553
Email: sales@elliottequip.com

Built for You.
www.elliottequip.com

Courtesy of Crane.Market

TECHNICAL SPECIFICATIONS

Maximum Platform Height: 70' ground to platform floor.

Working Range: 75' max. height and 56' max. side reach.

Work Platform: 40x60" Top-Mount work platform with 40" high rails. Equipped with two safety lanyard attachment loops and two safety harnesses and 72" lanyards. Platform capacity 600 lbs.

Platform Leveling System: Hydraulic "closed" system consisting of twin platform cylinders interacting with a boom-actuated master cylinder mounted in boom support turret. System provided with factory-set relief valves to compensate for oil expansion or overload during platform leveling operation. Remote releveling controls provided in platform and at ground controls to give precise releveling capability.

Platform Controls: Three individual proportional electronic controllers meter pilot-operated, pressure-compensated modulating valves. Remote controls for boom operations from platform operate from a removable remote control box. Hi/Lo range, start/stop and engine speed toggle controls are also located at platform. Electric remote control cable extends through the electrical slip ring to cable carrier on side of boom to extending boom sections.

Lower Controls: Mounted on roadside of turret.

Outrigger Controls: Parallel open-center stack valve for lever-operated control of right and left outriggers. The outrigger valves are mounted at the rear, under each corner of the bed with roadside valve controlling roadside outriggers and curbside valve controlling curbside outriggers.

Outriggers: "MH" out and down type main outriggers with 18' spread behind cab. "A" type auxiliary outriggers with 8' spread at rear. Front stabilizer required for 360 degree area of operation.

Frame: One piece, all welded, box-type fabrication with integral outrigger mounts.

Turret: Reverse offset turret is one-piece weldment mounted on turret box. Turret rotates on large diameter ball bearing.

Rotation: Continuous turret rotation with no stops. Hydraulic motor drives turret through self-locking gear box.

Boom: Steel rectangular tube sections. Assembly includes heavy-duty cylinder fittings, pivot pins, and replaceable wear pads.

Boom Extension: Two opposing "piggyback" extension cylinders extend the boom sections.

Lift: One single-acting full displacement, long stroke cylinder, provides smooth and stable boom elevation. Holding valve prevent boom from falling in event of hose failure.

Cylinders: All cylinders use microhoned cylinder tubing, chrome shafts, top grade packing and protective rod wipers. Cylinder-mounted holding valves provided on all load-holding cylinders.

Hoses: All high pressure hoses are wire braid reinforced with a minimum safety factor of 4 to 1.

Oil Tank Capacity: 35 gallon mounted to truck frame on roadside.

Hydraulic System: Operating pressure is 2,500 PSI. System is parallel open center type and is equipped with liquid-filled pressure gauge. Oil is supplied to upper cylinders through hydraulic union in center of turret to cable carrier along side of the boom.

Pump: Gear type, direct mount to truck PTO.

PTO: Heavy-duty, high-speed. Switch engaged from cab.

Cab Equipment: PTO switch with indicator light installed in truck cab. Engine speed control and start/stop installed with control switches in platform remote control box and also located at lower controls. U/L approved 5:BC dry chemical fire extinguisher installed in truck cab.

Operators Manual & Video: Two CDs and one printed copy of operation, maintenance, safety and parts manual provided with each unit. Operational and safety video provided at delivery.

Installation: Unit installed on truck, painted, system and tank filled with oil, tested, inspected, and ready to operate.

Standard Paint: Paint boom and turret red, outriggers red, and bed and boxes black. Top of steel bed painted with black nonskid surface.

Bumper: Bureau of Motor Carrier Safety rear bumper.

Weight: Approximately 17,600 lbs. with 24' steel-floor bed less truck.

Truck Chassis Required: Approx. 168" C.A. RBM 1,600,000 in-lb. per rail, 13,000 lb. front axle and 33,000 lb. GVWR required. Trucks must have increased cooling, heavy-duty front and rear springs, front frame extensions, 12V electrical system with high capacity alternator, cab clearance stop/tail/backup lights, and I.D. lamps. Recommended GVWR is minimum for HiReach with flatbed only. Contact factory when additional equipment is to be added.

Options:

5,900 lb Capacity Boom Winch

1,000 lb Capacity Platform Material Handling Jib.

Welder, Air, Pressure Washer, and110V Lines to Platform.

Custom Toolbox Configurations.

Much More....

Elliott Equipment Company reserves the right to change the specification of any unit at any time without prior notice. This brochure is only a statement of general specifications on the date of this publication. For more detailed info on specific Elliott trucks go to www.elliottequip.com

ELLIOTT EQUIPMENT COMPANY

Elliott Equipment Company
4427 South 76th Circle
Omaha, NE 68127

Phone: 402-592-4500
Fax: 402-592-4553
Email: sales@elliottequip.com

Built for You.
www.elliottequip.com

Courtesy of Crane.Market

MAXIMUM RANGE CAPABILITIES

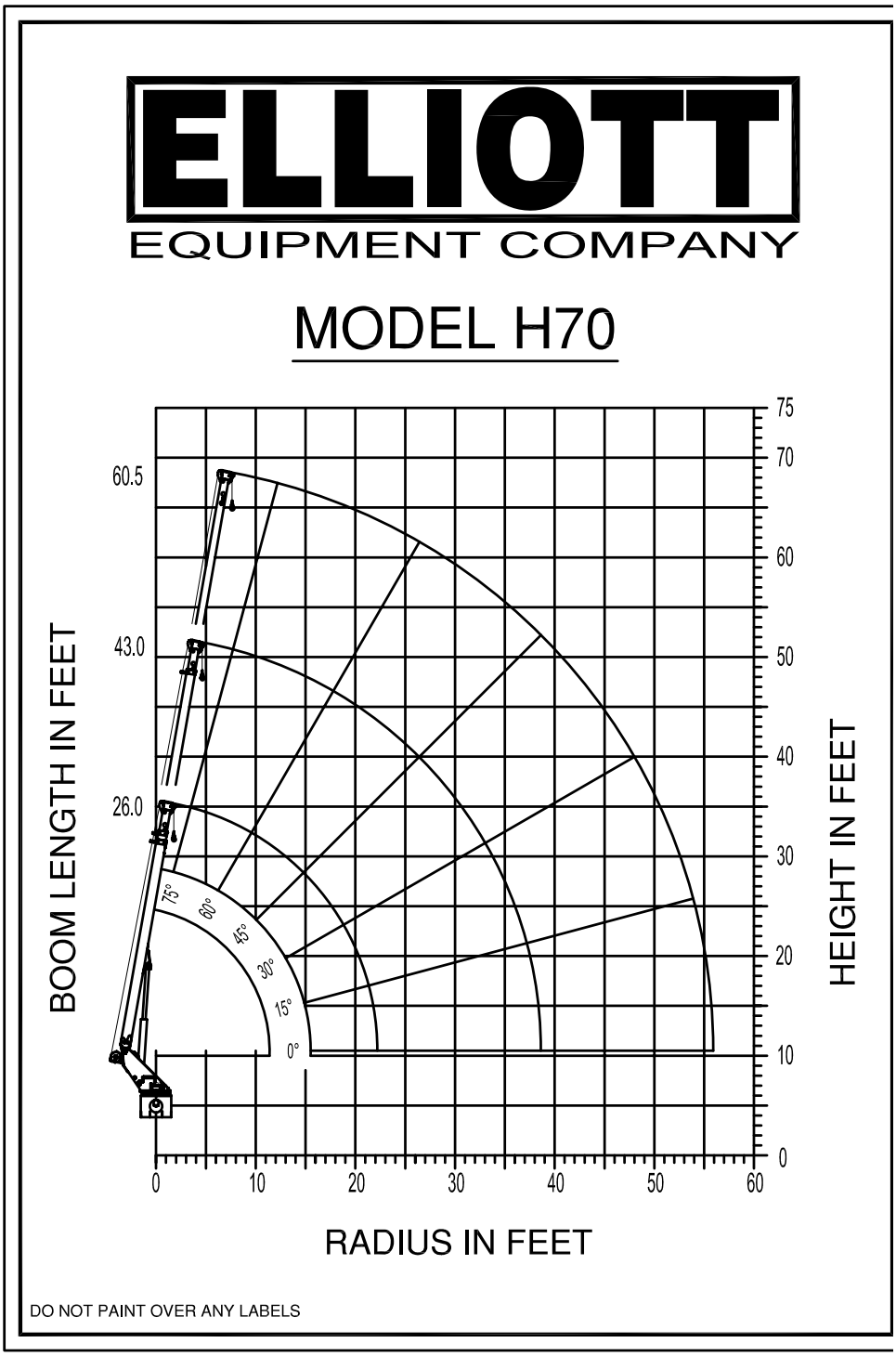

ELLIOTT EQUIPMENT COMPANY
Elliott Equipment Company
4427 South 76th Circle
Omaha, NE 68127
Phone: 402-592-4500
Fax: 402-592-4553
Email: sales@elliottequip.com
Built for You.
www.elliottequip.com

Courtesy of Crane.Market

MAXIMUM WINCH LIFTING CAPABILITIES

MAXIMUM WORKING LOADS

CRANE OPERATION

MODEL H-70

WINCH LINE LOAD (POUNDS) WITH BUCKETS OR PLATFORM REMOVED.

	26.0' BOOM LENGTH		43.0' BOOM LENGTH		60.5' BOOM LENGTH	
RADIUS (FT.)	ANGLE (DEG.)	LOAD (LBS.)	ANGLE (DEG.)	LOAD (LBS.)	ANGLE (DEG.)	LOAD (LBS.)
2	80	5,900				
5	75	5,200	80	3,800		
8	68	4,600	77	3,500	80	2,500
9	65	4,000	75	3,400	79	2,400
11	60	3,400	72	3,100	77	2,300
14	53	3,300	69	2,800	75	2,200
16	45	3,200	65	2,400	72	2,000
20	30	2,700	60	2,000	69	1,900
23	15	2,500	54	1,900	65	1,700
24	0	2,400	53	1,900	64	1,600
29			45	1,800	60	1,500
36			30	1,600	52	1,300
40			15	1,500	46	1,200
41			0	1,400	45	1,200
51					30	1,100
57					15	1,000
59					0	1,000

USE OUTRIGGERS AT ALL TIMES * AVOID JERKING LOADS
360° RADIUS * USE 2 PART LINE FOR LOADS OVER 2,500 LBS.

DEDUCT 400 LBS. WITH BASKET ATTACHED

030304 1075020

ELLIOTT EQUIPMENT COMPANY
Elliott Equipment Company
4427 South 76th Circle
Omaha, NE 68127
Phone: 402-592-4500
Fax: 402-592-4553
Email: sales@elliottequip.com

Built for You.
www.elliottequip.com

Courtesy of Crane.Market

CHASSIS DATA

	H70F
Wheelbase (WB)	220" / 559 cm
Cab to Axle (CA)	168" / 427 cm
Cab to End of Frame (EOF)	293" / 744 cm
Frame Section Modulus	13.3 in3 / 120,000 psi
Front Axle Gross Weight Rating	13,000 lb / 5897 kg
Rear Axle Gross Weight Rating	20,000 lb / 9072 kg
Extended Front Frame	Required for Front Stabilizer

Chassis data is minimum general requirements-not for engineering.
Actual dimensions and truck data will depend on truck selection and axle configuration.

OPTIONS

MH Outriggers With Shortjacking

Reduce outrigger spread with auxiliary MH outriggers and Elliott's Automatic Safety Rotation Lockout to operate your HiReach in confined spaces.

Platform Material Handling Jib

Equip your HiReach platform with a material handling jib crane to lift up to 1,000 pounds right from the platform.

High Capacity Boom Winch

Explore the 5,900 lb or 2,000 lb capacity boom winch options that convert the HiReach into a combination aerial work platform and crane.

Outrigger Pad Holders

Outrigger pad holders safely store your pads for travel and leave plenty of room for tool boxes.

Bed Accessories

Mount a wide variety of tool accessories including welders, power washers, and generators on the bed with lines to the platform.

Platform Accessories

Choose from a list of platform accessories including 110V outlets, welding leads, hydraulic tools, and much more.

Hydraulic 2-Speed Digger

Dig holes without requiring a second truck by using Elliott's stowable planetary digger system featuring 24", 36", and 48" auger options.

Line Body

Let us work with you to customize a line body to secure your tools and supplies the the best way for your application.

ELLIOTT EQUIPMENT COMPANY

Elliott Equipment Company
4427 South 76th Circle
Omaha, NE 68127

Phone: 402-592-4500
Fax: 402-592-4553
Email: sales@elliottequip.com

Built for You.
www.elliottequip.com

Courtesy of Crane.Market