10.542 CTY

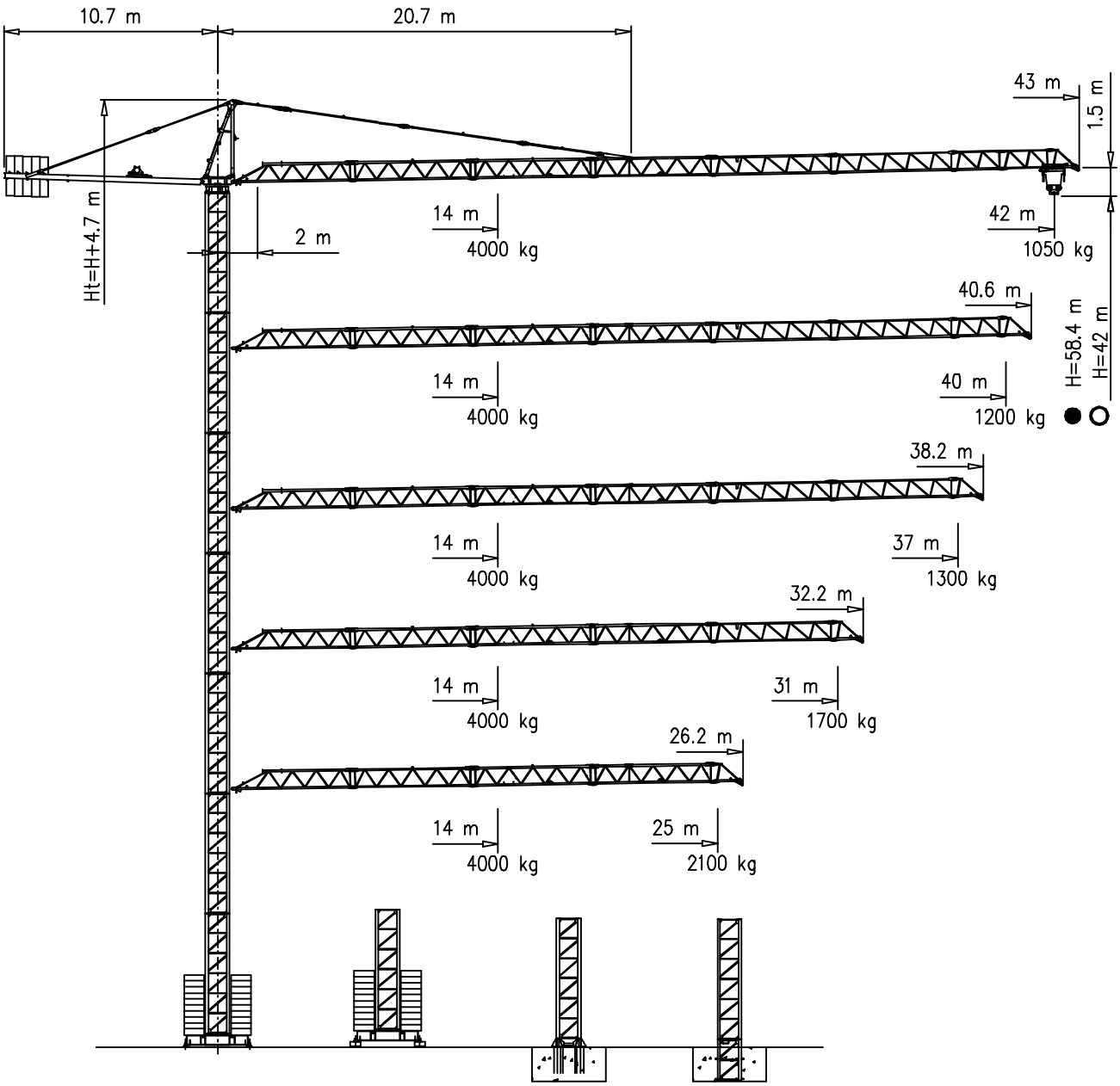

○ S1210 – 1.21x1.21 m

● S1700 – 1.70x1.70 m

CE FEM A4

Courtesy of Crane.Market

AFM Gru 10.542 CTY

Torre/Reazioni – Masts/Reactions – Mat/Réactions – Maste/Eckdrücke – Màstil/Reacciones – Tramo/Reacções

S1210

25 m → 42 m

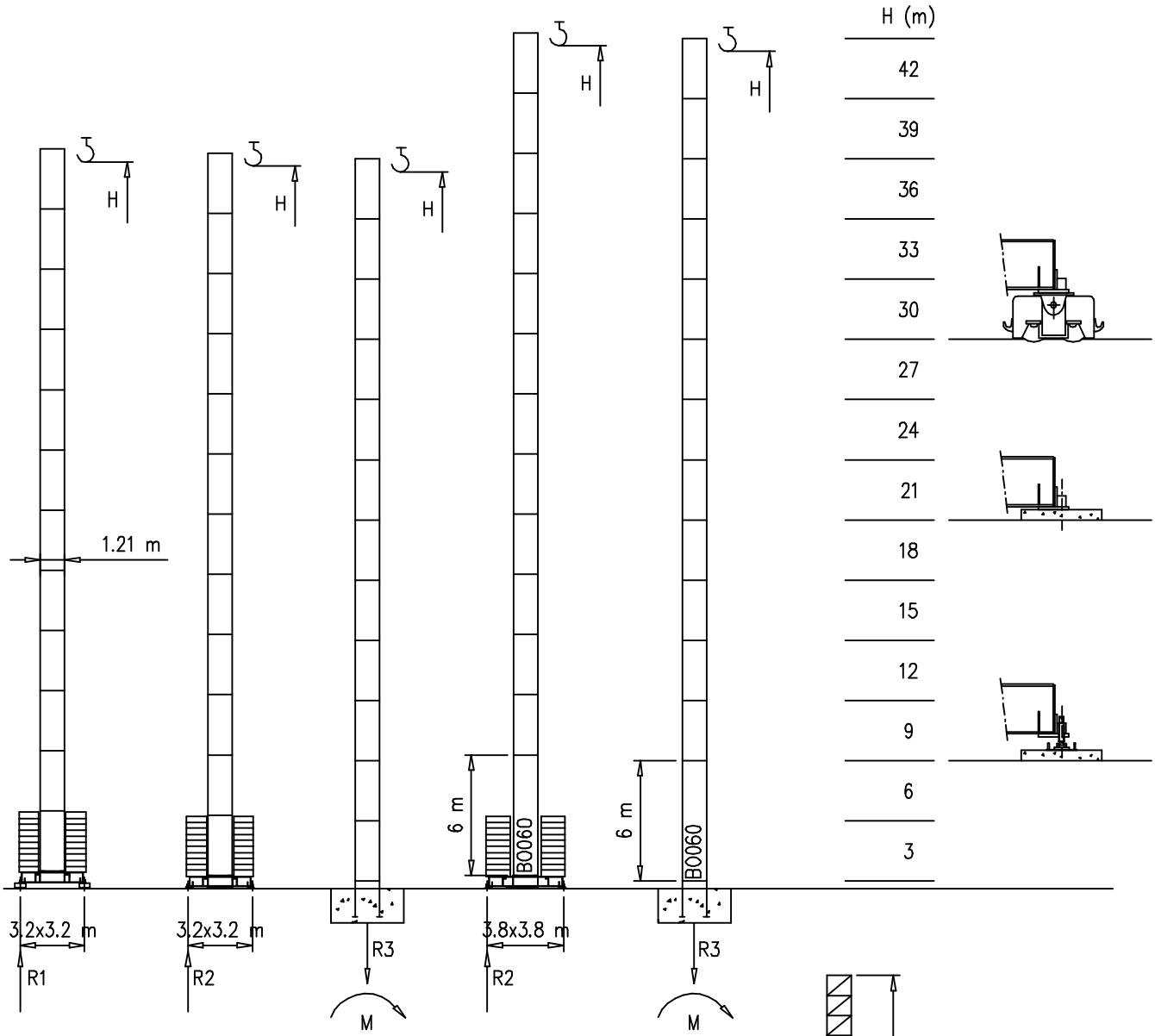

H=37–42 m	
R1	
R2	69 t
R3	40 t
M	185 tm

H=24–36 m	
R1	53 t
R2	53 t
R3	25.6 t
M	116 tm

H=0–23 m	
R1	49 t
R2	47 t
R3	22 t
M	80 tm

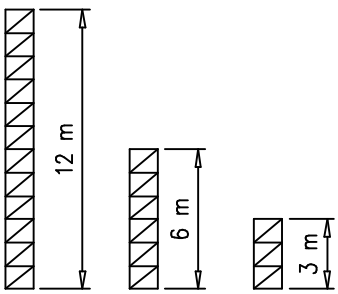

Peso zavorra – Ballast weight – Poids du lest – Ballastgewicht – Peso de lastre

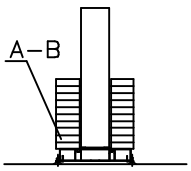

H	n°	Tot.
0–18 m	12 A–B	36000 kg
19–36 m	18 A–B	54000 kg
37–42 m	24 B	72000 kg

	A	B
L	3.6m	4.0m
k	0.3m	1.2m
d	1.15m	0.19m

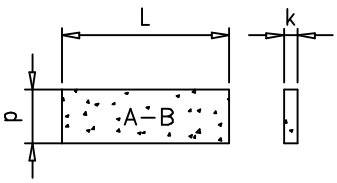

Courtesy of Crane.Market

AFM Gru 10.542 CTY

Torre/Reazioni – Masts/Reactions – Mat/Réactions – Maste/Eckdrücke – Mãstil/Reacciones – Tramo/Reacções

S1700

25 m → 42 m

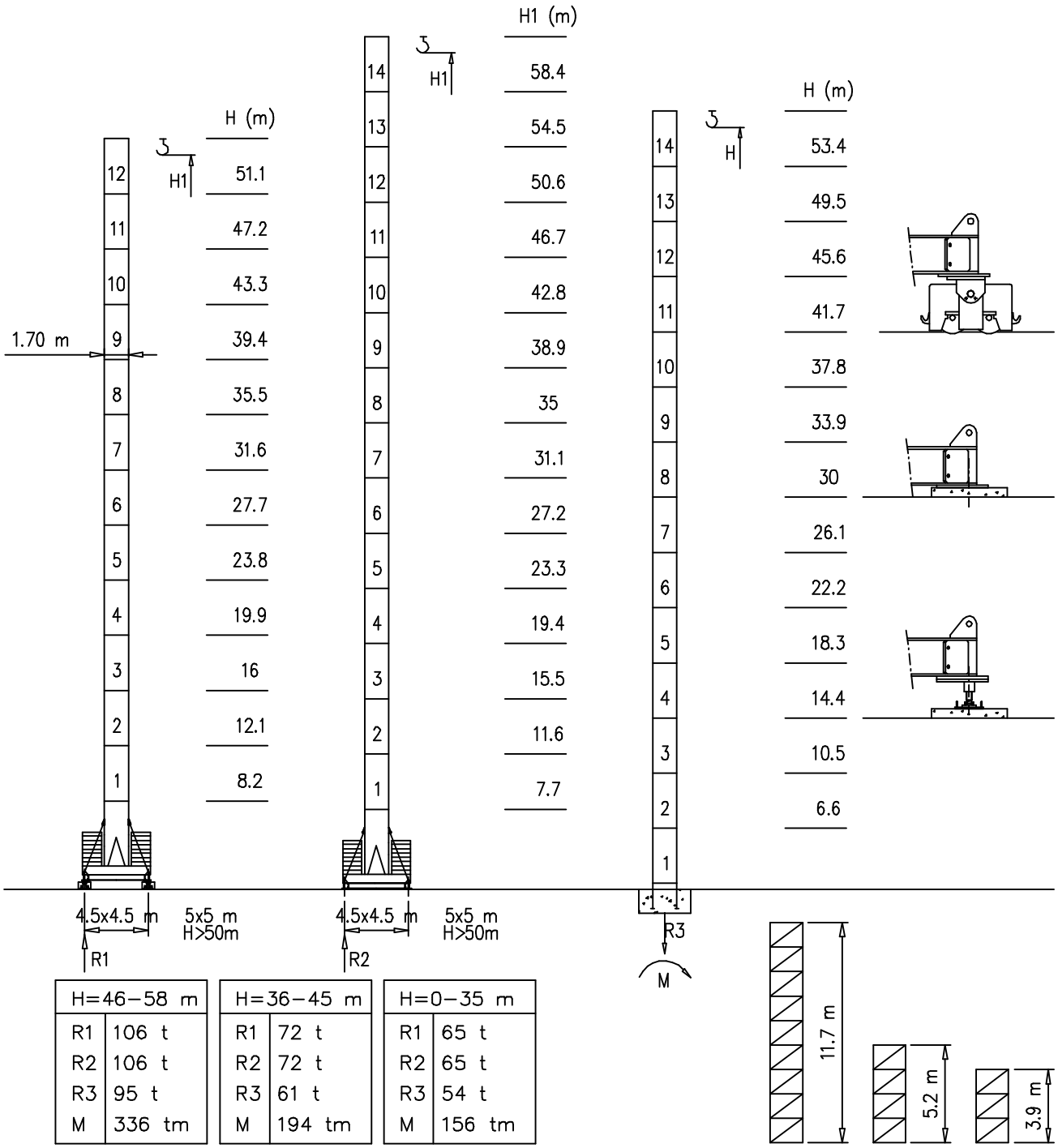

H=46–58 m	
R1	106 t
R2	106 t
R3	95 t
M	336 tm

H=36–45 m	
R1	72 t
R2	72 t
R3	61 t
M	194 tm

H=0–35 m	
R1	65 t
R2	65 t
R3	54 t
M	156 tm

Peso zavorra – Ballast weight – Poids du lest – Ballastgewicht – Peso de lastre

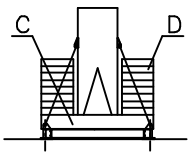

H	n°	Tot.
0–35 m	2C+ 18D	60800 kg
36–45 m	2C+ 22D	72000 kg
46–58 m	2C+ 32D	105000 kg

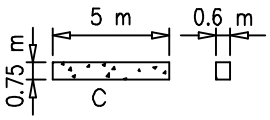

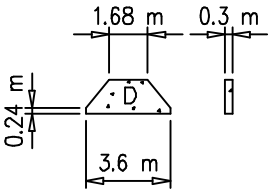

Courtesy of Crane.Market

AFM Gru 10.542 CTY

Curve di carico – Courbes de charges – Load diagrams – LastKurven – Curvas de cargas

Pmax 2500 kg

8250 kg	42 m	2	22	24	26	28	30	32	34	36	38	40	42	m
		2500	2500	2300	2000	1900	1800	1550	1450	1350	1200	1150	1050	kg
8250 kg	40 m	2	22	24	26	28	30	32	34	36	38	40	m	
		2500	2500	2300	2000	1900	1800	1600	1500	1400	1270	1200	kg	
6600 kg	37 m	2	22	24	26	28	30	32	34	36	37	m		
		2500	2500	2300	2000	1900	1800	1600	1500	1400	1300	kg		
4950 kg	31 m	2	22	24	26	28	30	31	m					
		2500	2500	2300	2000	1900	1800	1700	kg					
4950 kg	25 m	2	22	24	25	m								
		2500	2500	2300	2100	kg								

Pmax 3000 kg

8250 kg	42 m	2	18	20	22	24	26	28	30	32	34	36	38	40	42	m
		3000	3000	2800	2500	2300	2000	1900	1800	1550	1450	1350	1200	1150	1050	kg
8250 kg	40 m	2	18	20	22	24	26	28	30	32	34	36	38	40	m	
		3000	3000	2800	2500	2300	2000	1900	1800	1600	1500	1400	1270	1200	kg	
6600 kg	37 m	2	18	20	22	24	26	28	30	32	34	36	37	m		
		3000	3000	2800	2500	2300	2000	1900	1800	1600	1500	1400	1300	kg		
4950 kg	31 m	2	18	20	22	24	26	28	30	31	m					
		3000	3000	2800	2500	2300	2000	1900	1800	1700	kg					
4950 kg	25 m	2	18	20	22	24	25	m								
		3000	3000	2800	2500	2300	2100	kg								

Pmax 4000/2000 kg

8250 kg	42 m	2	14	16	18	20	22	24	26	28	30	32	34	36	38	40	42	m	
		4000	4000	3600	3200	2800	2500	2300	2000	1900	1800	1550	1450	1350	1200	1150	1050	kg	
8250 kg	40 m	2	14	16	18	20	22	24	26	28	30	32	34	36	38	40	m		
		4000	4000	3600	3200	2800	2500	2300	2000	1900	1800	1600	1500	1400	1270	1200	kg		
6600 kg	37 m	2	14	16	18	20	22	24	26	28	30	32	34	36	37	m			
		4000	4000	3600	3200	2800	2500	2300	2000	1900	1800	1600	1500	1400	1300	kg			
4950 kg	31 m	2	14	16	18	20	22	24	26	28	30	31	m						
		4000	4000	3600	3200	2800	2500	2300	2000	1900	1800	1700	kg						
4950 kg	25 m	2	14	16	18	20	22	24	25	m									
		4000	4000	3600	3200	2800	2500	2300	2100	kg									

Courtesy of Crane.Market

AFM Gru 10.542 CTY

Montaggio – Montage – Erection – Montage – Montaje – Montagem

X (m)	kg
3,2x3,2	2300kg
3,8x3,8	4500kg
4,5x4,5	3800kg

S1210	
(m)	(kg)
3	840
6	1500
12	2950

S1700	
(m)	(kg)
3,9	1650
5,2	2250
11,7	4490

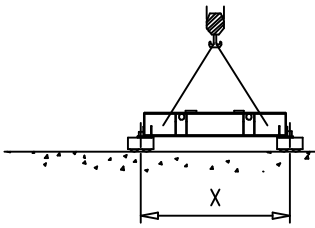

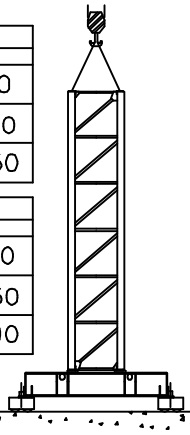

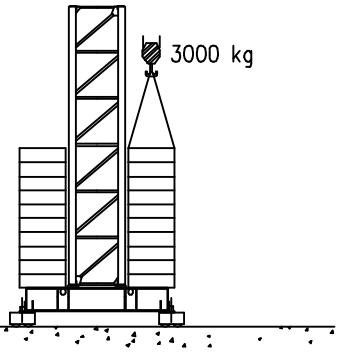

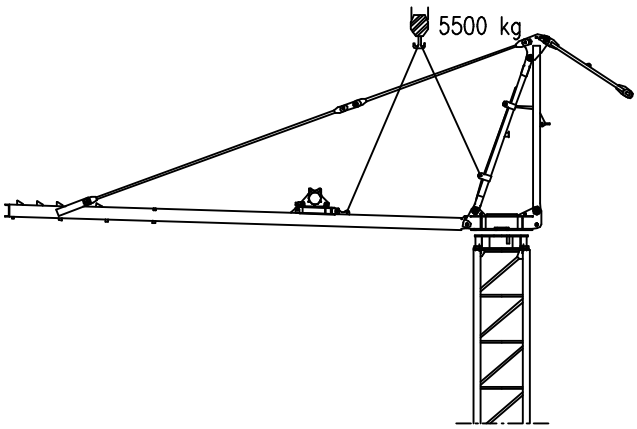

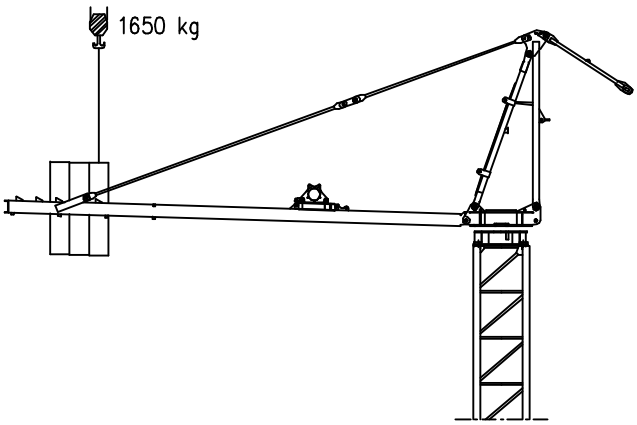

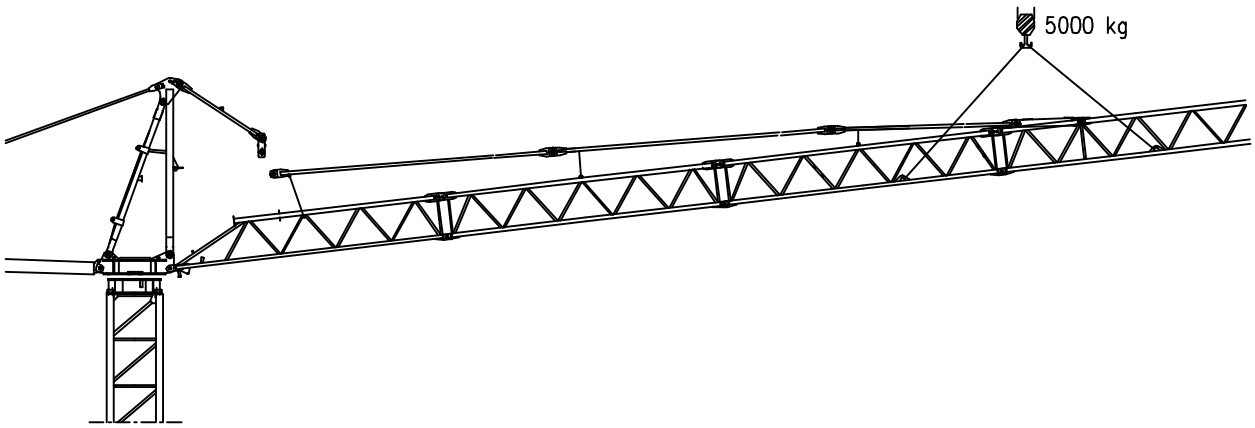

Courtesy of Crane.Market

10.542 CTY

Meccanismi – Mechanisms – Mécanismes – Antriebe – Mecanismos

Sollevamento S15.40 e V15.40 Hoisting Levage Heben Elevaciòn Elevaçao			1a	4 m/min	2500 kg	11 kW	S15.40 22 kVA
			2a	20 m/min	2500 kg		V15.40 20 kVA
			3a	40 m/min	1200 kg		
Sollevamento S20.60 e V20.60 Hoisting Levage Heben Elevaciòn Elevaçao			1a	7 m/min	2500 kg	14.7 kW	S20.60 28 kVA
			2a	28 m/min	2500 kg		V20.60 24 kVA
			3a	56 m/min	1200 kg		
Sollevamento S20.40 e V20.40 Hoisting Levage Heben Elevaciòn Elevaçao			1a	4 m/min	3000 kg	14.7 kW	S20.40 28 kVA
			2a	20 m/min	3000 kg		V20.40 24 kVA
			3a	40 m/min	1500 kg		
Sollevamento S25.60 e V25.60 Hoisting Levage Heben Elevaciòn Elevaçao			1a	7 m/min	3000 kg	18.5 kW	S25.60 34 kVA
			2a	28 m/min	3000 kg		V25.60 28 kVA
			3a	56 m/min	1500 kg		
Sollevamento S15.40 e V15.40 Hoisting Levage Heben Elevaciòn Elevaçao			1a	4 m/min	2000 kg	11 kW	S15.40 22 kVA
			2a	20 m/min	2000 kg		
			3a	40 m/min	1200 kg		
			1a	2 m/min	4000 kg		V15.40 20 kVA
			2a	10 m/min	4000 kg		
			3a	20 m/min	2400 kg		
Sollevamento S20.60 e V20.60 Hoisting Levage Heben Elevaciòn Elevaçao			1a	7 m/min	2000 kg	14.7 kW	S20.60 28 kVA
			2a	28 m/min	2000 kg		
			3a	56 m/min	1200 kg		
			1a	3.5 m/min	4000 kg		V20.60 24 kVA
			2a	14 m/min	4000 kg		
			3a	28 m/min	2400 kg		
Carrello Trolleying Distribution Katzfahren Distribuciòn Distribuiçao			1a	OP 5 m/min	4000 kg	2.2 kW	Potenza elettrica necessaria Puissance èlectrique nècessaire Necessary electric power Anschlusswert – Potencia
			2a	25 m/min	4000 kg		
			3a	50 m/min	2000 kg		
Rotazione Slewing Orientation Schwenken Orientaciòn Rotaçao			1a	0 ⟶ 0.2	giri/min tr/min rp/min	2.2 kW @ 1200rpm	
			2a	0 ⟶ 0.6			
			3a	0 ⟶ 0.9			
Traslazione Travelling Translation Kranfahren Traslaciòn Translaçao			1a	0 ⟶ 20		3.7 kW	

Rete elettrica – Réseau – Mains supply – Netzstrom – Red – Rede electrica	400V – 50 Hz

FMgru s.r.l.
via Emilia 11–29010 Pontenure PC ITALY
tel. 0523/510446 ric.aut. fax 0523/510365
www.fmgru.com e-mail: info@fmgru.com

FEM 1.001
2000/14/CE

Documento commerciale non contrattuale
Per tutte le informazioni tecniche riferirsi alle corrispondenti istruzioni

Unverbindliches Vertriebsdokument.
Für technische Informationen, siehe die entsprechenden Anweisungen.

This commercial document is not legally binding. For any technical information, please refer to the corresponding instructions.

Documento commercial no contractual
Para cualquities información tecnica, ver la noticia correspondiente.

Code: 15ICA37C56A0			
Ed.	Data	Rev	Data
1	05.06.03	1	23.11.03

Courtesy of Crane.Market