ROUGH-TERRAIN SCISSOR LIFTS

COMPACT 10/12 DX

- Compact and highly manoeuvrable
- Increased working area.
- Excellent gradeability (40%).
- Standard 4 wheel drive.

ISO 9001
GROUP
PINGUELY
HAULOTTE

ARTICULATED BOOMS | VERTICAL MASTS | TELESCOPIC BOOMS | SCISSOR LIFTS | TRAILERS

Haulotte®
ON THE UP

Courtesy of Crane.Market

COMPACT 10/12 DX

Rough-terrain scissor lifts

The Haulotte® advantages

- Hydraulic differential lock for improved rough terrain traction
- Full proportional controls
- Robust, reliable and easy to maintain design
- Tight turning radius provides excellent manoeuvrability

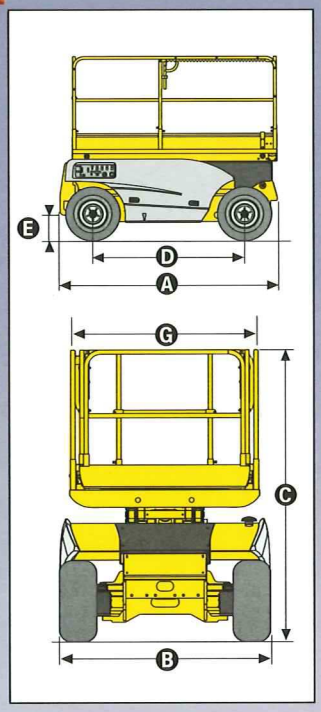

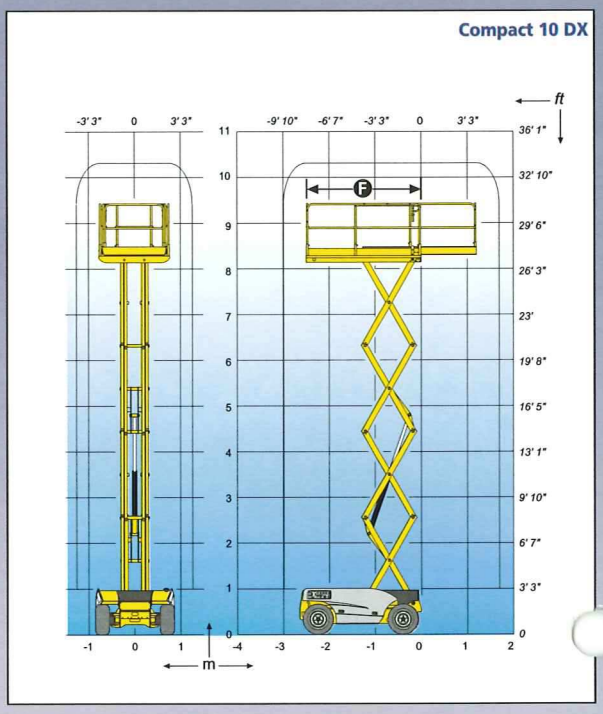

STANDARD FEATURES

- Deutz engine
- 4 wheel drive with 2 front steer wheels
- 3° Tilt alarm
- 1,2m (47 in) platform extension
- 12V - 70 Ah Batteries
- Removable operator's control box
- Free wheeling device
- Hourmeter
- Towing hooks / lifting eyes
- Hydraulic brakes
- Manual emergency lowering control at ground level
- Foam filled all terrain tyres
- Side protection
- Horn
- Safety harness anchor points

OPTIONS & ACCESSORIES

- Rotating beacon
- Power line in cage
- Collapsible handrails
- Automatic levelling outriggers
- Work light
- Catalytic exhaust
- Biodegradable oil
- Motion alarm for movements and translation
- Non-marking tyres
- Cold weather kit

SPECIFICATIONS

	Compact© 10 DX		Compact© 12 DX	
Working height	10,2 m	33 ft 5 in	12,14 m	40 ft
Platform height	8,2 m	27 ft	10,14 m	33 ft 3 in
Platform capacity	565 kg	1,245 lb	450 kg	992 lb
Ⓐ Length	2,65 m - 8 ft 7 in			
Ⓑ Width	1,80 m - 6 ft			
Ⓒ Stowed height (guardrail)	2,37 m	7 ft 10 in	2,54 m	8 ft 4 in
Stowed height (platform)	1,5 m	4 ft 11 in	1,68 m	5 ft 6 in
Ⓓ Wheelbase	1,87 m - 6 ft 1 in			
Ⓔ Ground clearance	25 cm - 10 in			
Ⓕ x Ⓖ Platform size	2,5 x 1,54 m - 8 ft 2 in x 5 ft 1 in			
Platform extension	1,2 m - 47 in			
Drive speed	0,8 / 5,5 km/h - 0,5 / 3,4 mph			
Outside turning radius	3,78 m - 12 ft 4 in			
Inside turning radius	1,45 m - 4 ft 9 in			
Lift / lower speed (s)	35 / 40 sec.		40 / 45 sec.	
Power source	Deutz 17,9 kw			
Gradeability	40%			
Brakes	Hydraulic			
Tyres (foam filled)	26 x 12-12			
Hydraulic tank	80 l - 17,6 gal			
Fuel tank	30 l - 6,60 gal			
Weight	3 330 kg	7341 lb	3 830 kg	8443 lb

CE

AS1418.10

DISTRIBUTED BY

2420603620 - Ed. 04/2004-A - Copyright © by Pinguely-Haulotte – products specifications are subject to change without notice – non contractual pictures.

Haulotte®

HAULOTTE UK LTD • Stafford Park 6 - Telford - Shropshire TF3 3AT - UK • Tel : +44 (0)1952 292753 • Fax : +44 (0)1952 292758 • e-mail: haulotte@haulotte.co.uk
HAULOTTE SCANDINAVIA AB • Aröds Industriväg 66B - 44243 Hisingsbacka - SWEDEN • Tel : +46 (0) 31 744 32 90 • Fax : +46 (0) 31 744 32 99 • e-mail: hwallin@haulotte.se
HAULOTTE AUSTRALIA PTY LTD • 39 Nicholas Drive - Dandenong - VIC - 3175 - AUSTRALIA • Tel : +61 (0)3 9706 6787 • Fax : +61 (0)3 9706 6797 • e-mail: sales@haulotte .com.au
PINGUELY-HAULOTTE GROUP • La Péronnière - B.P. 9 - 42152 L'Horme - FRANCE • Tél : +33 (0) 4 77 29 24 24 • Fax : +33 (0) 4 77 29 43 95 • e-mail: haulotte@haulotte.com
Web : http://www.haulotte.com

Courtesy of Crane.Market