C R A W L E R D O Z E R S

450H

Courtesy of Machine.Market

Some day, other dozers may be this good

The all-new 450H looks and performs like no other dozer because it is like no other. Its streamlined exterior is as functional as it is appealing, providing unsurpassed, unobstructed, all-around visibility. A single lever puts low-effort control of both direction and steering in one hand. Blade response is also exceptionally smooth. Equipped with a noticeably quiet, state-of-the-art, air-conditioned cab and fully adjustable high-back suspension seat, the 450H offers everything an operator needs to be his best.

But it's not just the one in the seat who benefits from H-Series advances. Your service personnel will also appreciate the extended service intervals, sight gauges, vertical spin-on filters, and lockable ground-level service doors that provide quick, convenient, wide-open access.

Add to that, the 450's reputation for rock-solid reliability and traditionally high resale value, and you've got a machine even your accountant will love.

This new 70-hp dozer does so much so well, you'll want to set aside some significant time to get to know it. So read through this brochure. Then ask your John Deere dealer to arrange a demo, and experience for yourself, the H-Series difference.

Courtesy of Machine.Market

Courtesy of Machine.Market

Excavating may be your job, but it doesn't have to be work

The 450H is a welcome addition for anyone wanting to reduce their workload while increasing their opportunities. That's because its full-featured drivetrain introduces a new level of operating ease and control – providing power turns, counterrotation, automatic load sensing, infinite speed control, and plenty of other production-enhancing advantages.

Others may offer hydrostatic drivetrains in their dozers. But none come close to offering the combination of flexibility, ease of operation, and proven performance you get in the 450H. Read on and you'll see what we mean.

A single lever controls forward/reverse travel and steering. Detented so it doesn't require an operator's constant touch or attention, this lever allows smooth, low-effort modulation, even on rough terrain. What's more, steering, transmission, and decelerator response rates are adjustable, enabling this dozer to adapt to the operator.

Travel speed is controlled by a separate lever that's unaffected by direction changes. Simply set maximum desired speed and forget it – and let automatic load sensing do the "shifting."

No preset gears here. Instead, an infinitely variable range from standstill to 5 mph gives a 450H operator total flexibility to choose the right speed for the job. If desired, forward or reverse travel speed can be limited, to help extend undercarriage life.

Courtesy of Machine.Market

Automatic load sensing takes both the guess and work out of efficient operation. Just set the ground speed lever to the maximum desired speed and the dozer does the rest. As loads change, the drivetrain responds, powering up or down to maintain peak engine rpm and efficiency without stalling. It's fully functional at any engine speed, always letting an operator concentrate on doing his best bladework.

The 450H steers the same and maintains its preset speed whether it's on level ground or a 2-to-1 slope. Since it won't free-wheel like a torque converter-equipped dozer, you never need to cross-clutch or ride a brake.

Usable counterrotation is another distinct Deere advantage. It's especially helpful for overcoming corner-loaded side drafts and for quickly repositioning the blade on-the-go. Or use it for space-saving spot turns, no matter what's underfoot. Unlike other dozers, you never need to shift into neutral or limit its use to good ground conditions to avoid stalling out.

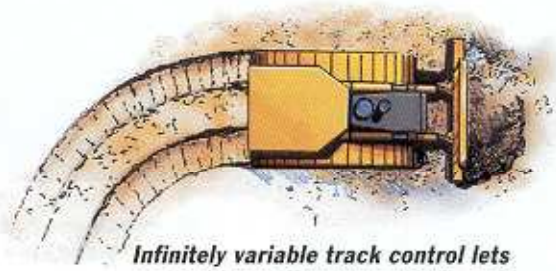

Infinitely variable track control lets you speed-up or slow power to each track. For smooth, full-power turns that don't tear up soft terrain like conventional clutch/brake systems.

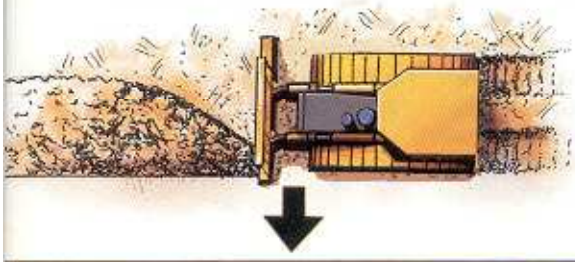

Tight pivot turns are possible at any speed, for unrestricted maneuverability. Steering is always predictable and precise. Exclusive auto-track system automatically keeps the 450H running straight in forward or reverse.

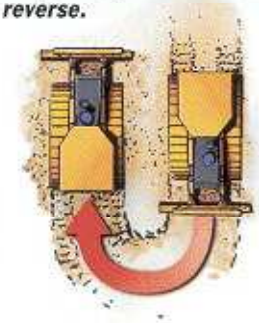

Courtesy of Machine.Market

Microprocessor-controlled electronic monitor keeps a vigilant watch on 7 vital machine functions with warnings you can see and hear. Gauges are optional.

Floor-to-ceiling tinted glass doors allow easy entry into the roomy ROPS cab. This modular enclosure is isolation-mounted for quietness, and fully pressurized to keep out dust. When the weather permits, rattle-free sliding side windows and latchable doors open wide.

Directional automotive-type vents deliver warm or cool air with quiet efficiency (air conditioning available) and help keep the view clear. For non-cab crawlers, an optional underseat 30,000 Btu/hr. heater helps keep your operator's mind off his feet – and on his work. Mirror is standard, AM/FM weatherband radio is optional.

Decelerator gives low-effort toe-tip control of engine and ground speed for close-quarters confidence and agility around trenches, footings, and other obstacles. Fully engaging it brings the dozer to a stop.

Courtesy of Machine.Market

Far more than just another cab, it's a comfortable work environment

Looking for a way to keep your operators comfortable and help make them more productive? Or perhaps an edge to recruit new ones? Order your new 450H with this world-class modular cab.

Venture inside and you'll agree this is one well-appointed, efficient, work environment. Visibility is virtually unrestricted. The cab-forward design places the operator closer to the front for a commanding view of the blade. And the narrow dash, tapered hood lines, and large expanse of tinted glass further open up the work area.

An ergonomically correct single lever gives intuitive control of both direction and steering. Programed modulation ensures smooth starts and direction changes, virtually eliminating jerky and abrupt movements. There's also a decelerator that slows both engine and ground speed for close-up work such as backfilling around footings.

Standard ROPS equipped tractors also come equipped with many of these and other efficiency-enhancing features. For specifics, see the back cover of this brochure or visit your John Deere dealer.

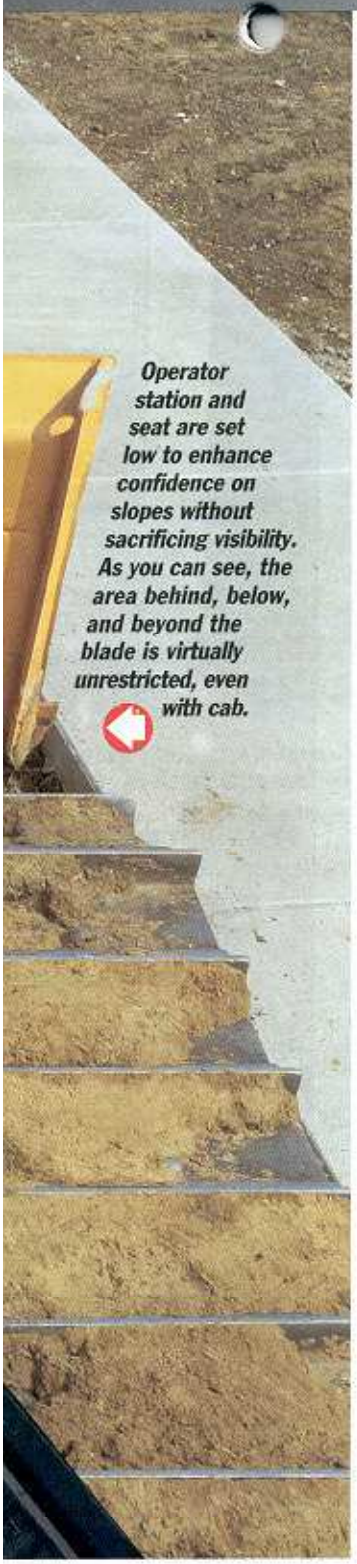

Operator station and seat are set low to enhance confidence on slopes without sacrificing visibility. As you can see, the area behind, below, and beyond the blade is virtually unrestricted, even with cab.

Retractable seat belt, slip-resistant floormat, ergonomically positioned grab bars, neutral-start safety lever, and automatic park brake all help keep your operator out of harm's way.

Optional side-console storage compartment keeps lunch box, beverages, or even a Thermos™ bottle close at hand.

Cloth or vinyl deluxe-suspension high-back armchair seat adjusts seven ways for day-long support and comfort. Standard suspension seat provides the same deep sculpting. Adjustable armrests and footrests are standard. Side knee cushions and under-seat storage box are available.

Courtesy of Machine.Market

The 450H makes the fine art of grading easier to master

All dozers push dirt. But if you want one that also has the finesse for finish work, you need a 450H.

Superior grade work begins with good balance, and this dozer has it. Whether you choose a standard 5-roller 450H or a long-track, blade ratio and center of gravity are optimized, resulting in a stable machine you've simply got to grade with to appreciate.

Visibility is excellent and unrestricted. An operator can clearly see both corners of the cutting edge, as well as the area behind, below, and beyond the blade.

An ergonomically correct T-bar lever puts low-effort control of the all-hydraulic blade in the palm of your right hand. Blade response is quick, powerful, and uncompromising. On-the-go tilt and angle adjustments are as easy as twisting your wrist.

Up front, the double-bevel cutting edge penetrates easily, and the moldboard curvature sheds even sticky material, keeping the load rolling for easier cut-and-fill work. Blade pitch is 3-position adjustable, and, four blade choices from 90 to 124 inches are available.

Generous hydraulic flow and precise metering deliver a natural "feel" that will enhance any operator's grading skills.

What a view! The narrow dash, tapered sheet-metal, small-diameter front idlers, center-section spillsheet, high blade heel, and angled blade end plates all contribute to unsurpassed visibility, with or without cab.

Courtesy of Machine.Market

The working end of this dozer is all-business. Its closed-cell blade design and robot-welded, fabricated, box-section C-frame are strong and durable. A heavy-duty C-frame is also available for use with root rakes and for other severe-duty tasks.

Center-section spill sheet protects blade pivot points and cylinders from material spill-over while allowing good visibility over the corners. Angle cylinders are powerful, responsive, and positioned out of the dirt to resist material buildup. Cordura-covered hoses are well-protected, yet easily replaced.

When jobsites or terrain conditions change, so can the three-pitch-adjustable blade. Change over takes about 15 minutes.

Cutting edge is close to the idlers for smooth grading. High heel clearance gives superior visibility, penetration, and back-dragging ability.

A heavy-duty, hardened ball-and-socket joint and line-bored mounting pins retain their tightness for long-term grading precision.

We did our level-best to position the 450H center of gravity as close to the optimum point as possible. The bottom-line benefit? Superior balance you've got to blade-with to believe.

Courtesy of Machine.Market

Nothing runs like this Deere, because nothing's built like it.

The all-new 450H is the product of literally hundreds of thousands of hours of research, development, and testing. Before even a single component took shape, high-tech tools such as virtual-reality electronic modeling helped mold the design.

Proven on computer screens and in rigorous factory tests, the 450H was also refined and reaffirmed in the field by more than 150 dozer owners and operators on jobsites throughout North America.

Designed and built with state-of-the-art tools and techniques by a quality-conscious workforce at our world-class facility in Dubuque, Iowa, the H-Series is simply our best 450 ever.

But don't just take our word for it. Perhaps the best way to get an idea of what to expect out of the 450H is to see what goes into it. The closer you look, the more you'll like.

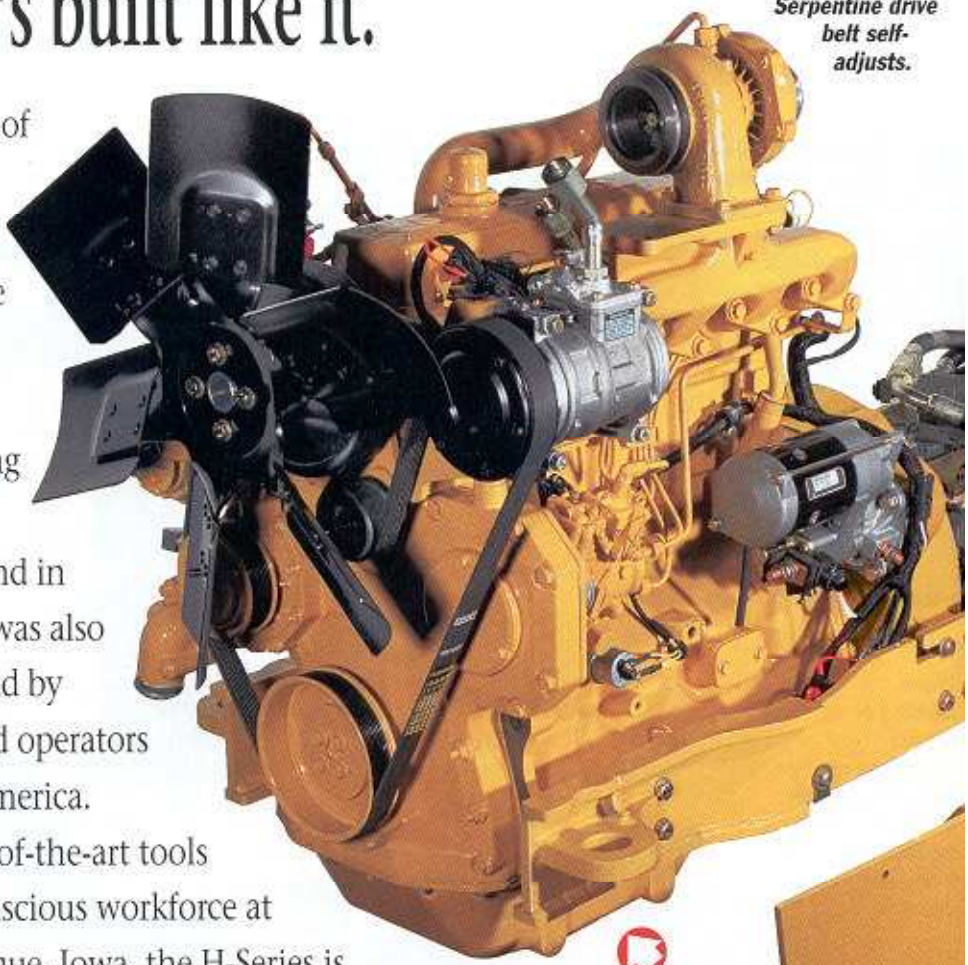

Fan drive is mounted low and independent of the water pump, for longer pump life and maximum cooling efficiency.

Serpentine drive belt self-adjusts.

Deep-sump oil pan maintains adequate engine lubrication on steep slopes. Jet-spray nozzles bathe the bottom sides of pistons with cooled oil, increasing life.

Axial-piston hydrostatic motors are mounted directly to the final drives at the back of the mainframe. A rear access panel makes removal easy. Heavy-duty high-pressure hoses connect the pumps and motors that form the drivetrain. O-ring face seal (ORFS) couplings virtually eliminate leaks.

Courtesy of Machine.Market

Individually replaceable, spin-cast, wet-type cylinder liners dissipate heat for reduced ring wear and oil breakdown. High-ring pistons provide high compression, three low-friction rings deliver superior oil control.

Free-breathing, cross-flow cylinder head, specially shaped pistons, and contoured valves increase intake and exhaust flows for maximum power output and top fuel efficiency.

Advanced POWERTECH® diesel meets all worldwide emission standards for off-road engines – so the 450H can go to work anywhere these standards exist.

Engine, hydrostatic-drive pumps, and hydraulic pump are bolted to this subframe, forming an easy-to-remove powertrain package. It's attached to the mainframe on rubber mounts to reduce noise and isolate vibration.

Deere diesels deliver maximum power at a low 2,200 rpm. The slower speed yields good fuel economy, increases longevity, and also helps reduce noise.

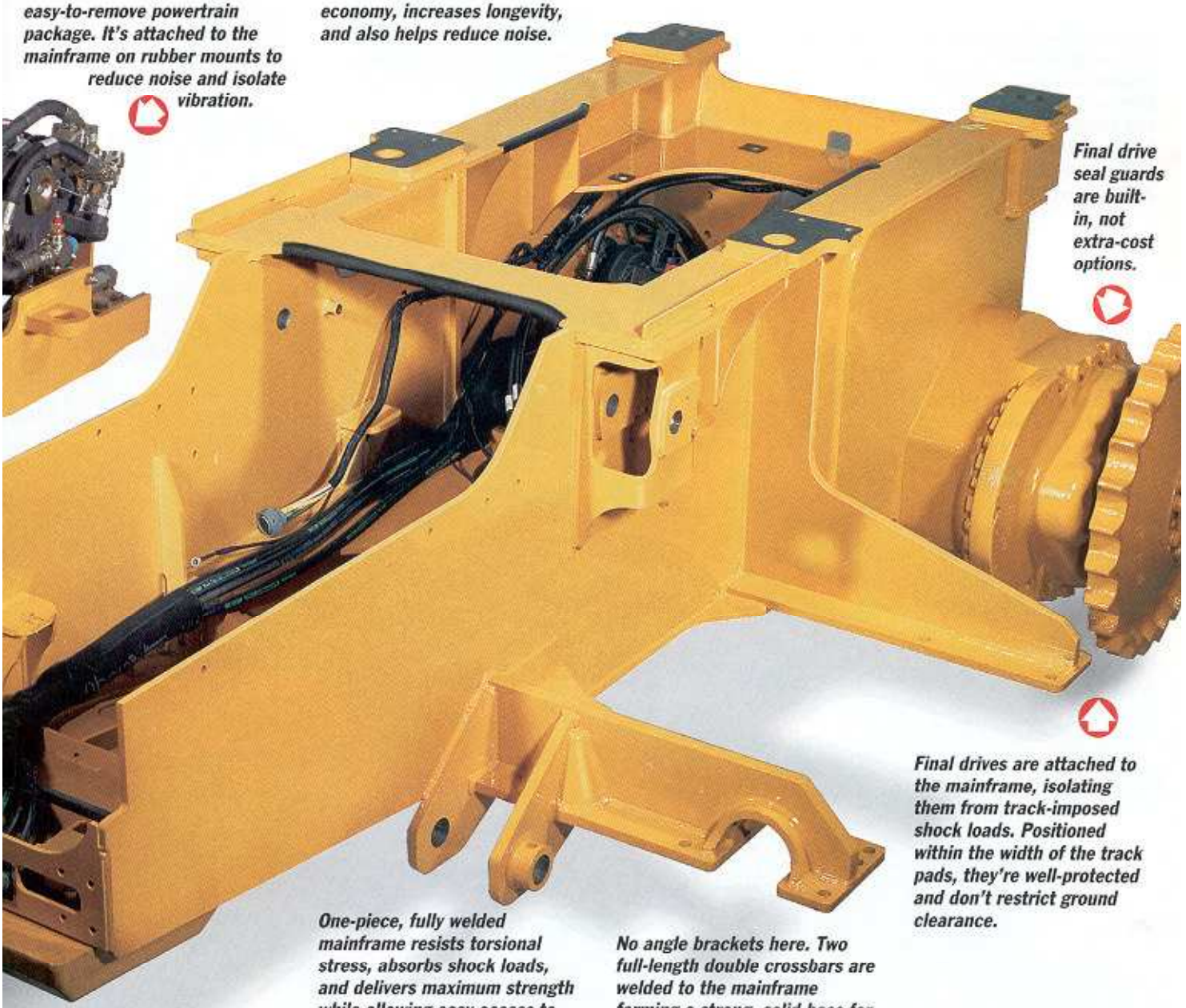

Final drive seal guards are built-in, not extra-cost options.

Final drives are attached to the mainframe, isolating them from track-imposed shock loads. Positioned within the width of the track pads, they're well-protected and don't restrict ground clearance.

One-piece, fully welded mainframe resists torsional stress, absorbs shock loads, and delivers maximum strength while allowing easy access to major drivetrain components. Robotic welding helps ensure consistent weld quality. Compared to the bolt-together frames found on other dozers, there's no comparison.

No angle brackets here. Two full-length double crossbars are welded to the mainframe forming a strong, solid base for the undercarriage.

Courtesy of Machine.Market

Spring-steel washers in sealed chain keep abrasives out of the precision-machined, induction-hardened, counterbored pins and bushings. Stepped bushings in the optional sealed-and-lubricated chain also help extend life.

Induction-hardened nodular iron idlers are lifetime lubricated and sealed with metal face seals. Stainless steel shims provide vertical adjustment to help keep these dozers grading like new.

Through-hardened boron-steel overlapping shoes are bolted to the chain with the grousers nearly in-line with pin/bushing joints. This virtually eliminates backbending and scrubbing, lengthens grouser shoe life.

Deep-hardened, lifetime-lubricated, cast-steel carrier roller delivers durable, maintenance-free operation. Curved roller support resists packing and aids in clean-out.

450H Dozers put plenty of track on the ground for solid stability on slopes, ground-gripping traction, and balanced bladework.

Heavy-duty steel-channel track frames form a strong, solid working base. Two large recoil springs absorb impacts. Steeply sloped covers resist material buildup, aid in clean-out.

Courtesy of Machine.Market

How the H-Series' bottom-line helps enhance yours

When you consider that more than 50 percent of crawler upkeep costs go into maintaining an undercarriage, it pays to run a 450H.

Compare its Dura-Trax™ pins, bushings, links, and rollers to those found on other dozers. You don't need a tape measure to know that the John Deere components are bigger. But they're also better. Because it's what we do with that extra metal that enables the 450H undercarriage to last so long. Read on to learn why it's the best on any dozer.

Cast steel-alloy sprockets have deep-hardened wear surfaces for long life. Unique tooth profile also helps extend sprocket and bushing life.

Track links are forged from boron-steel alloys; deep-hardened, quenched, and tempered. Induction-hardening further increases rail-surface wear resistance. Boron steel permits heat-treating beyond normal wear limits, for long and consistent wear.

Cross-section illustrates heat-treating in H-Series track links and rollers. Red indicates depth of hardness – Rc45 through the 100 percent wear limit in track links and rollers.

Large boron-steel track rollers are hardened through the wear limit inside and out for long life. Irregular spacing causes bottom rollers to contact links at varying points for a smoother, quieter ride.

Courtesy of Machine.Market

Easy to work with, simpler to live with– that's the all-new 450H

To be sure, the all-new 450H is loaded with features that make it one of the smoothest operating dozers you can run. But that's only part of the H-Series story. This new crawler is also chock-full of convenience and safety enhancements that make it simpler to own.

Thoughtful details such as an easy-to-clean undercarriage, quick-to-replace hydraulic hoses, designed-in diagnostics, and extended service intervals all minimize maintenance and keep these machines up-and-running.

Perhaps best of all, the 450H is backed by an extensive John Deere dealer network providing Counterparts™, Secure™, and OilscanPlus®, as well as numerous other product support programs that help you control costs and stay profitable. To learn more about John Deere's comprehensive Total Repair Cost Management line-up, turn the page.

Courtesy of Machine.Market

Open wide and be awed. Hinged sideshields provide ground-level access to the batteries, hydraulic-fluid sight gauge, electrical disconnect switch, window washer fluid reservoir, cold weather starting aid, and vertical spin-on transmission, hydraulic, and fuel filters.

36-gallon fuel tank capacity is enough to take you through a full day's work. Lockable cap is part of the standard vandal-protection package.

Check or add to the engine oil and coolant levels or change the air filter through this large door atop the hood.

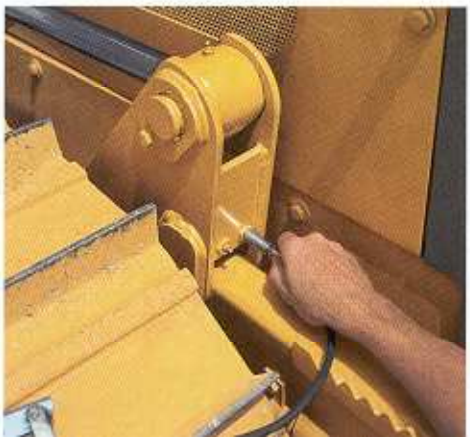

Neutral-start lever and automatic park brake help keep your people out of harm's way. Numerous other safety features come standard, too.

No more crawling under the dozer to grease the C-frame pivots. Lube bank puts these difficult-to-service zerks within easy reach.

Courtesy of Machine.Market

Nobody backs you better

Other dealerships may be bigger, but nobody knows 450-size crawlers like John Deere dealers. Regardless of whether you run one dozer or dozens, we support your efforts with a comprehensive line-up of ongoing programs that help control costs, increase profits, and reduce stress.

Total Repair Cost Management is part of John Deere's proactive, fix-before-fail machine maintenance strategy that gives you the tools to avoid downtime and help protect your cash flow. It covers the full life-span of your new dozer and can be applied to other non-Deere equipment, as well.

Preventive maintenance (PM) contracts take a messy job off your hands and let you lock-in maintenance costs for a specific period of time. They help avoid downtime by ensuring that critical maintenance work gets done on schedule, and at your convenience.

MaintainIt™ software helps you start your own computerized maintenance program. It includes a library of John Deere machines, outlines maintenance tasks, and provides a spare-parts inventory list. The program lets you track equipment by hourmeter or date, and can print, fax, or e-mail purchase or work orders.

Courtesy of Machine.Market

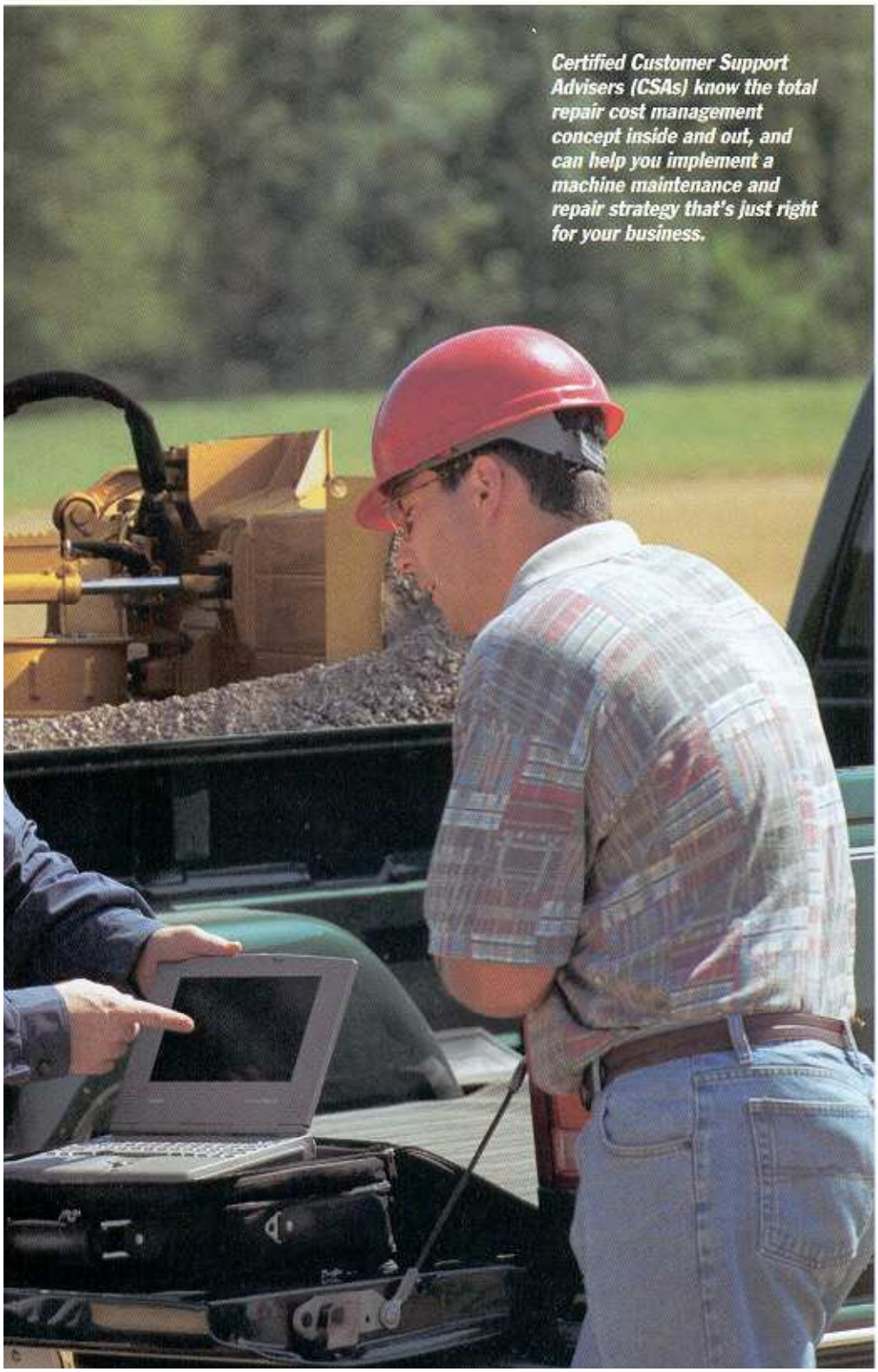

Certified Customer Support Advisers (CSAs) know the total repair cost management concept inside and out, and can help you implement a machine maintenance and repair strategy that's just right for your business.

Your new 450H comes standard-equipped with a 12-month Secure warranty. Secure-Extended® lets you lengthen your coverage to custom-fit your operation. It's a great way to guard your cash flow. Travels well, too, because it's backed by John Deere and honored at all John Deere construction equipment dealers.

Time is money. And the Counterparts promise ensures that the 450H parts you need will be at participating Counterparts dealers when you need them, or they're free (ask your dealer for details).

Your John Deere dealer is your one stop for all makes of parts. For example, Mastertrax® undercarriage offers quality track parts and service for virtually any crawler make or model. John Deere dealerships also offer full lines of edges, teeth, fluids, filters, hoses, batteries, and reman components, to list just a few.

More than just engine oil sampling, OilscanPlus® fluid analysis tells you what's going on inside your machine's transmission and hydraulic pump, as well. It's an excellent tool for pre-empting catastrophic downtime.

Courtesy of Machine.Market

Optional extreme-duty grille screen, hose guarding, limb risers, and front, side, and rear brush screens help protect both ROPS- and cab-equipped machines in severe-duty environments.

TOOLS AND ATTACHMENTS

Clearing rake

Pin-on blade rake

Clearing blade

Slopeboard

Hinged dozer

U-blade

Landfill blade

Laser

Cable plow

Courtesy of Machine.Market

Here's how to make the most of your investment

Frequently work on slopes? Equip a 450H LGP with 16-inch grousers and you're off and running. Its 65-inch gauge provides the stability you need for steep gradework.

It's probably obvious to you by now that the John Deere 450H isn't just another dozer. Its highly adaptable drivetrain not only provides unparalleled ease of operation and maneuverability, but seemingly endless flexibility, too.

Available in a number of configurations with a wide variety of creature-comforts, this new dozer can also be equipped with an impressive array of other options and attachments. Additions that can open-up new job opportunities by putting more work within your reach.

Choose from fire-line plows, slopeboards, root rakes, rippers, and a host of other attachments. If you have a special need, get to your John Deere dealership. They have the resources, know-how, and equipment to help you make the most of your investment.

BLADE CHOICES

	90 inches	97 inches	115 inches	124 inches
450H	X	X		
450H LT	X	X	X	
450H LGP			X	X

GROUSER SHOE CHOICES

	14 inches	16 inches	24 inches
450H	X	X	
450H LT		X	
450H LGP		X	X

Check these charts for the blade and undercarriage options you have in mind. Heavy-duty C-frames and special-duty shoes are also available. Ask your dealer for details.

Scraper

Ripper

Fireline plow

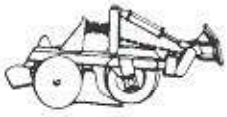

Blade ripper teeth

Winch

Bedding plow

3-point hitch

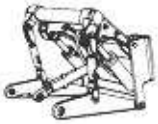

Blade back-ripper

Disk harrow

Courtesy of Machine.Market

SPECIFICATIONS

ENGINE	450H	450H LT	450H LGP
Type	John Deere 4045D naturally aspirated	John Deere 4045D naturally aspirated	John Deere 4045T with turbo-charger
Rated power	70 SAE net hp (52 kW) / 73 SAE gross hp (54.5 kW) @ 2,200 rpm	70 SAE net hp (52 kW) / 73 SAE gross hp (54.5 kW) @ 2,200 rpm	74 SAE net hp (55 kW) / 79 SAE gross hp (59.0 kW) @ 2,200 rpm
Drawbar	51 hp (38 kW)	51 hp (38 kW)	55 hp (41 kW)
Cylinders, wet sleeve	4	4	4
Displacement	276 cu. in. (4.52 L)	276 cu. in. (4.52 L)	276 cu. in. (4.52 L)
Fuel consumption, typical	1.5 to 2.3 gal./hr. (4.9 to 8.7 L/h)	1.5 to 2.3 gal./hr. (4.9 to 8.7 L/h)	1.5 to 2.3 gal./hr. (4.9 to 8.7 L/h)
Maximum net torque	223 lb.-ft. (302 Nm) @ 1,200 rpm	223 lb.-ft. (302 Nm) @ 1,300 rpm	254 lb.-ft. (345 Nm) @ 1,300 rpm
Lubrication	pressure system with full-flow spin-on filter and oil-to-water cooler		
Air cleaner	dual stage dry type with safety element, precleaner, and dash-mounted restriction indicator		
Electrical system	12 volt with 65-amp alternator		
Cooling fan	blower		

	450H / 450H LT / 450H LGP
TRANSMISSION	dual-path, electronic-controlled, hydrostatic drive load-sensing feature automatically adjusts speed and power to match changing load conditions each individual track is powered by a variable-displacement piston pump and two-speed fixed-displacement motor combination decelerator controls speed from holding to 5.0 mph (8.0 km/h)
Travel speeds (infinitely variable) Forward and reverse	0 to 5.0 mph (0 to 8.0 km/h)
FINAL DRIVES	heavy-duty triple-reduction final drives attach directly to the mainframe and are isolated from track frame and dozer frame loads
STEERING	single-lever steering and direction control full power turns, counterrotation, and infinitely variable track speeds provide unlimited maneuverability and optimum control hydrostatic steering eliminates steering clutches and brakes
BRAKES	hydrostatic (dynamic) braking stops the machine whenever the direction-control lever is moved to neutral, whenever the decelerator is depressed to the end of travel, or whenever the brake pedal is depressed
AUTOMATIC PARK BRAKE	exclusive safety feature engages wet, multiple-disk brakes automatically whenever the engine stops, whenever the operator applies the brake pedal, or whenever the neutral start lever lock is in stop position machine cannot be driven with brake applied, reducing wear out or need for adjustment

HYDRAULIC SYSTEM	
System	open center
Pressure, main relief	3,000 psi (20 685 kPa)
Pump	gear
Flow	15 gpm (56.8 L/min.) @ 2,200 rpm
Filter, return oil	10 micron
Control	T-bar three function
Cylinders	heat-treated, chrome-plated, polished cylinder rods with hardened steel (replaceable bushings) pivot pins

CAPACITIES (U.S.)	
Fuel tank with lockable cap	36 gal. (136 L)
Cooling system with coolant recovery tank	17 qt. (16 L)
Engine oil including spin-on filter	14 qt. (13.2 L)
Transmission reservoir refill with filter change	11.3 gal. (42.7 L)
Final drive (each)	9 qt. (8.5 L)
Hydraulic reservoir refill with filter change	8.5 gal. (32.2 L)

All power train and hydraulic systems allow 45-degree maximum operation.

Courtesy of Machine.Market

UNDERCARRIAGE

	450H	450H LT	450H LGP
	John Deere Dura-Trax™ features large deep-heat-treated components pins and bushings are sealed for life rollers and idlers are permanently sealed and lubricated full-length track frame covers reduce material buildup and ease cleaning		
Chain			
Standard	sealed	sealed	sealed and lubricated
Optional	sealed and lubricated	sealed and lubricated	
Grouser width (closed center, single bar)	16 in. (406 mm)	16 in. (406 mm)	24 in. (610 mm)
Track shoes, each side	37	40	40
Ground contact area	2,464 sq. in. (15 897 cm^2)	2,752 sq. in. (17 755 cm^2)	4,128 sq. in. (26 632 cm^2)
Ground pressure	6.1 psi (42.1 kPa)	5.6 psi (38.6 kPa)	4.0 psi (27.6 kPa)
Ground clearance with single-bar grouser (excluding grouser height)	13.6 in. (346 mm)	13.6 in. (346 mm)	13.6 in. (346 mm)
Length of track on ground	77 in. (1956 mm)	86 in. (2184 mm)	86 in. (2184 mm)
Track gauge, standard	57 in. (1450 mm)	57 in. (1450 mm)	65 in. (1650 mm)
Track rollers, each side	5	6	6
Track pitch	6.29 in. (159.8 mm)	6.29 in. (159.8 mm)	6.29 in. (159.8 mm)

SAE OPERATING WEIGHTS

Base weights were computed for units with standard equipment, rollover protective structures, full fuel tanks, and 175-lb. (79 kg) operators.

With 97-in. (2377 mm) blade and 16-in. (406 mm) track shoes	15,000 lb. (6818 kg)	15,500 lb. (7045 kg)	
With 124-in. (3038 mm) blade and 24-in. (610 mm) track shoes			16,500 lb. (7500 kg)

OPTIONAL OR SPECIAL EQUIPMENT

Add (+) or deduct (–) lb. (kg) as indicated to base weight for units with

Rock guards (4)	257 lb. (117 kg)	288 lb. (131 kg)	288 lb. (131 kg)
14-in. (343 mm) track shoe	– 148 lb. (– 67 kg)		
Swamp shoe			25 lb. (11 kg)
Deluxe seat group	20 lb. (9 kg)	20 lb. (9 kg)	20 lb. (9 kg)
Cab with heater	590 lb. (268 kg)	590 lb. (268 kg)	590 lb. (268 kg)
Cab with air conditioning	675 lb. (306 kg)	675 lb. (306 kg)	675 lb. (306 kg)
Canopy heater	26 lb. (12 kg)	26 lb. (12 kg)	26 lb. (12 kg)
Counterweight, rear	330 lb. (150 kg)	330 lb. (150 kg)	330 lb. (150 kg)
Counterweight, front (each)	240 lb. (109 kg)	240 lb. (109 kg)	240 lb. (109 kg)
Lights, driving	3 lb. (1 kg)	3 lb. (1 kg)	3 lb. (1 kg)
Work lights, high intensity	9 lb. (4 kg)	9 lb. (4 kg)	9 lb. (4 kg)
Front tow hook	33 lb. (15 kg)	33 lb. (15 kg)	33 lb. (15 kg)
Retrieval hitch	50 lb. (23 kg)	50 lb. (23 kg)	50 lb. (23 kg)
Extended drawbar	72 lb. (33 kg)	72 lb. (33 kg)	72 lb. (33 kg)
Limb risers	229 lb. (104 kg)	229 lb. (104 kg)	229 lb. (104 kg)
Rear screen	76 lb. (35 kg)	76 lb. (35 kg)	76 lb. (35 kg)
Side screens	94 lb. (43 kg)	94 lb. (43 kg)	94 lb. (43 kg)
Screens, front and doors	179 lb. (81 kg)	179 lb. (81 kg)	179 lb. (81 kg)
4000S Winch	1,437 lb. (653 kg)	1,437 lb. (653 kg)	1,437 lb. (653 kg)
Winch Fairlead, four roller	187 lb. (85 kg)	187 lb. (85 kg)	187 lb. (85 kg)
Parallelogram ripper	1,306 lb. (594 kg)	1,306 lb. (594 kg)	1,306 lb. (594 kg)
90-in. (2205 mm) blade with all-hydraulic heavy-duty C frame	38 lb. (17 kg)	38 lb. (17 kg)	
90-in. (2205 mm) blade with all-hydraulic standard C frame	– 58 lb. (– 26 kg)	– 58 lb. (– 26 kg)	
97-in. (2377 mm) blade with all-hydraulic heavy-duty C frame	96 lb. (43 kg)	96 lb. (43 kg)	
115-in. (2818 mm) blade with all-hydraulic heavy-duty C frame		370 lb. (168 kg)	5 lb. (2 kg)
All-hydraulic heavy-duty C frame (less blade)	– 1,063 lb. (– 482 kg)	– 1,063 lb. (– 482 kg)	– 1,063 lb. (– 482 kg)

Courtesy of Machine.Market

DIMENSIONS

DIMENSIONS	450H	450H LT	450H LGP
A Overall height with ROPS or cab	102 in. (2590 mm)	102 in. (2590 mm)	102 in. (2590 mm)
B Overall length*	155 in. (3937 mm)	158 in. (4013 mm)	158 in. (4013 mm)
B' Overall length with winch**	177 in. (4496 mm)	177 in. (4496 mm)	177 in. (4496 mm)
C Ground clearance, minimum			
With single-bar grouser	13.6 in. (345 mm)	13.6 in. (345 mm)	13.6 in. (345 mm)
With swamp shoes	14.4 in. (366 mm)	14.4 in. (366 mm)	14.4 in. (366 mm)
D Blade lift height	30.4 in. (773 mm)	30.4 in. (773 mm)	30.4 in. (773 mm)
E Blade digging depth	20.8 in. (528 mm)	20.8 in. (528 mm)	20.8 in. (528 mm)
F Blade cutting edge angle, three position adjustable	52, 56, or 60 degrees	52, 56, or 60 degrees	52, 56, or 60 degrees

*For the 450H, add 1.3 in. (33.5 mm) to overall length with retrieval hitch and 6.5 in. (166.5 mm) to overall length with extended drawbar. For the 450H LT and 450H LGP, add 1.8 in. (46 mm) to overall length with extended drawbar.

**See page 23 for forestry application.

H-SERIES BLADE SPECS

90-IN. (2205 MM) BLADE

G Width	90 in. (2286 mm)	90 in. (2286 mm)
H Height	32.5 in. (826 mm)	32.5 in. (826 mm)
SAE capacity	1.9 cu. yd. (1.4 m^3)	1.9 cu. yd. (1.4 m^3)
I Blade angle	25.4 degrees	25.4 degrees
J Angled width	82.9 in. (2106 mm)	82.9 in. (2106 mm)
K Tilt	12.3 in. (313 mm)	12.3 in. (313 mm)
L Cut reach	0	0
M Width over track	73 in. (1854 mm)	73 in. (1854 mm)
N Cast reach	10 in. (255 mm)	10 in. (255 mm)

97-IN. (2377 MM) BLADE

G Width	97 in. (2464 mm)	97 in. (2464 mm)
H Height	32.5 in. (826 mm)	32.5 in. (826 mm)
SAE capacity	2.0 cu. yd. (1.5 m^3)	2.0 cu. yd. (1.5 m^3)
I Blade angle	25.4 degrees	25.4 degrees
J Angled width	89.3 in. (2267 mm)	89.3 in. (2267 mm)
K Tilt	13.3 in. (337 mm)	13.3 in. (337 mm)
L Cut reach	3.1 in. (78 mm)	3.1 in. (78 mm)
M Width over track	73 in. (1854 mm)	73 in. (1854 mm)
N Cast reach	13.2 in. (335 mm)	13.2 in. (335 mm)

115-IN. (2818 MM) BLADE

G Width	115 in. (2921 mm)	115 in. (2921 mm)
H Height	32.5 in. (826 mm)	32.5 in. (826 mm)
SAE capacity	2.29 cu. yd. (1.75 m^3)	2.29 cu. yd. (1.75 m^3)
I Blade angle	25.4 degrees	25.4 degrees
J Angled width	105.5 in. (2680 mm)	105.5 in. (2680 mm)
K Tilt	15.8 in. (400 mm)	15.8 in. (400 mm)
L Cut reach	10.6 in. (268 mm)	2.6 in. (65 mm)
M Width over track	73 in. (1854 mm)	89 in. (2260 mm)
N Cast reach	22 in. (558 mm)	14 in. (355 mm)

124-IN. (3038 MM) BLADE

G Width	124 in. (3150 mm)
H Height	30.2 in. (767 mm)
SAE capacity	2.15 cu. yd. (1.64 m^3)
I Blade angle	25.4 degrees
J Angled width	113.7 in. (2887 mm)
K Tilt	17.0 in. (432 mm)
L Cut reach	6.8 in. (173 mm)
M Width over track	89 in. (2260 mm)
N Cast reach	17.9 in. (454 mm)

Courtesy of Machine.Market

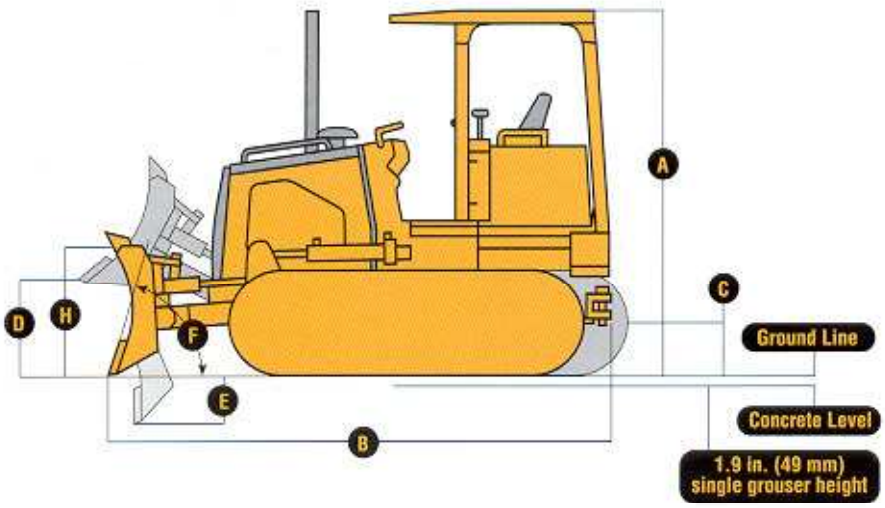

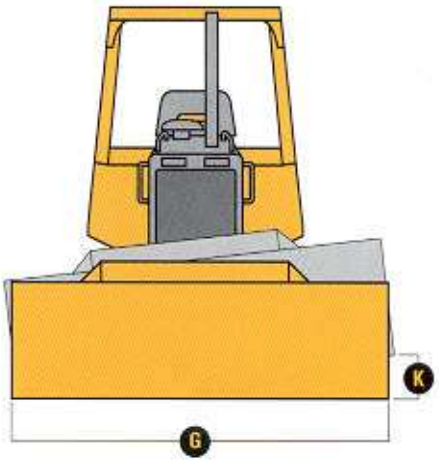

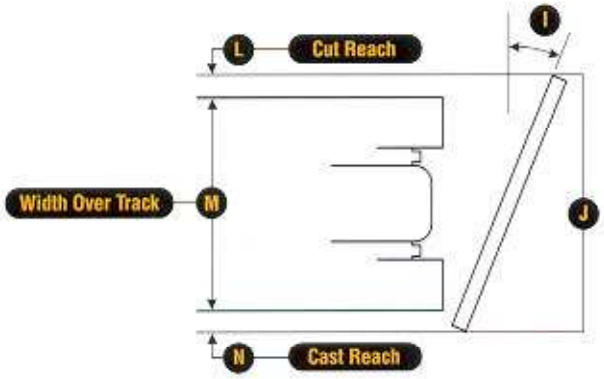

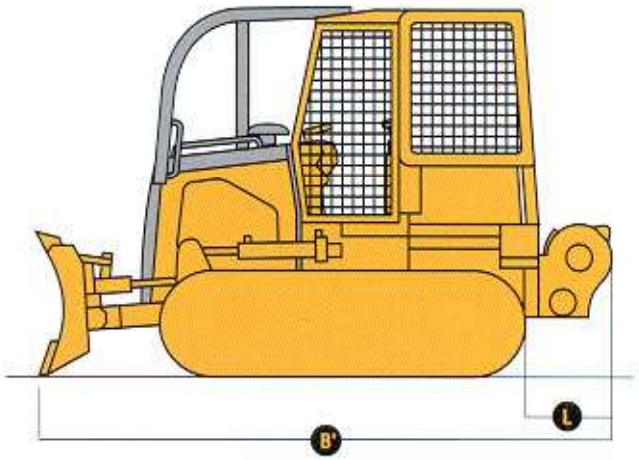

450H / 450H LT / 450H LGP

FORESTRY APPLICATION

available limb risers and screens for the rollover protective structure, John Deere-built, self-contained 4000S Winch* for versatile skidding and clearing operations

- B' Overall length with winch*.....177 in. (4496 mm)
- L 4000S Winch length.....29.6 in. (752 mm)

*Reference 4000S Winch spec sheet.

DRAWBAR PULL

Crawler speed vs ground pull.....usable pull will depend on traction and weight of tractor

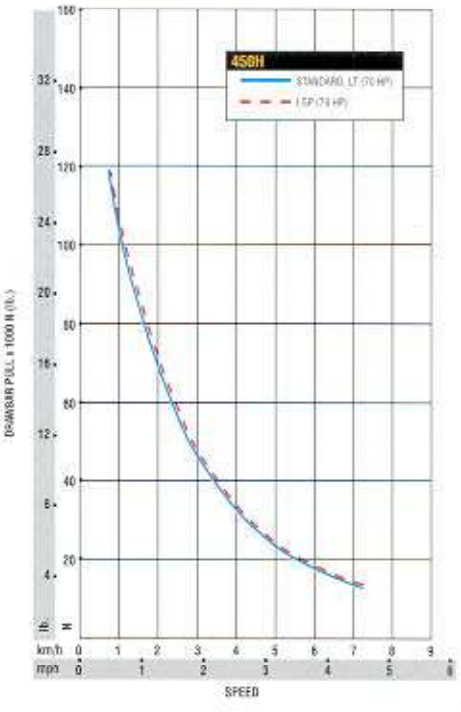

Courtesy of Machine.Market

	450H
ENGINE	
70-hp natural aspiration (standard and LT)	●
70-hp turbocharger (standard and LT)	■
74-hp turbocharger (LGP)	●
Isolation mounted	●
Electric fuel shutoff with key start switch	●
Oil-to-water engine oil cooler	●
Vertical spin-on oil filter	●
Vertical spin-on primary fuel filter with water separator	●
Vertical spin-on final fuel filter	●
Dual-element dry air cleaner with built-in precleaner and evacuator valve	●
Above-hood pre-screener/raincap	●
External primary precleaner*	■
Enclosed safety fan guard – Conforms to SAE J1308	●
Coolant recovery tank	●
Engine coolant to –34°F (–37°C)	●
Blower-type cooling fan	●
Trash-resistant seven-fin in-line radiator	●
Radiator sand screen – steel	■
Under-hood muffler with vertical exhaust stack	●
Pre-wired for ether start aid	●
Electric ether start aid	■
Engine coolant heater, 1,000 watts, 110 volts	■
Engine coolant heater, fuel fired	■
Steel-braid fuel lines*	■
POWER TRAIN AND CONTROLS	
Dual-path hydrostatic transmission	●
Single-lever steering, F-N-R direction control, and counterrotation	●
Decelerator pedal with automatic retardation	●
Engine-speed selection lever	●
Infinite ground speed selection lever	●
Automatic straight-ahead tracking	●
Dynamic braking (anti-free wheel)	●
Counterrotation	●
Service-brake pedal	●
Transmission neutral lock with safety start switch	●
Automatic spring-applied, hydraulic-released parking brake	●
Independent transmission oil reservoir with sight gauge	●
Onboard diagnostics with visual code display	●
Oil-to-air transmission oil cooler	●
Built-in final drive seal guards	●
Triple-reduction final drives with wet multi-disk brakes	●
Remote diagnostic test ports	■
Maximum forward/reverse speed 5.0 mph (8.0 km/h)	●
Automatic 15% increase in reverse speed from set forward speed	●
Reverse speed set to 3.3 mph (5.2 km/h) maximum*	■
Forward and reverse speed set to 3.3 mph (5.2 km/h) maximum*	■
Maximum forward/reverse speed increased to 6.0 mph (9.6 km/h)*	■
C-FRAMES AND BLADES	
Six-way all-hydraulic C-frame with adjustable blade pitch	●
Remote C-frame pivot grease banks	●
Cordura-covered hoses with conveniently replaceable lengths	●
Straight end bits	●
Pitch link, pitched mid-range	●
Alternate pitch link, pitched forward	■
Alternate pitch link, pitched back	■
Blade, 90-in. (2205 mm), with standard C-frame	■
Blade, 90-in. (2205 mm), with heavy-duty C-frame	■
Blade, 97-in. (2377 mm), with standard C-frame	●
Blade, 97-in. (2377 mm), with heavy-duty C-frame	■
Blade, 105-in. (2573 mm), with heavy-duty C-frame*	■
Blade, 115-in. (2818 mm), with heavy-duty C-frame	■
Blade, 124-in. (3038 mm), with heavy-duty C-frame	■
Blade, 128-in. (3136 mm), with heavy-duty C-frame*	■
Special blades*	■
Full-length spill sheet*	■
Blade liner*	■
ELECTRICAL	
12-volt system	●
Fuse panel with blade-style multi-fused circuit breakers	●
Horn, electric – Conforms to SAE J994, J1446	●
Reverse warning alarm – Conforms to SAE J994, J1446	●
Fuel gauge, electric, illuminated	●
Hourmeter, electric	●
Transmission oil pressure gauge, electric, illuminated	●
Master electrical disconnect	●
Positive battery terminal covers	●
By-pass start safety cover at starter	●
Electronic monitor with visual and audible warning	●
Alternator / Hydraulic filter restriction / Transmission filter restriction / Transmission oil temperature / Coolant temperature (audible) / Engine oil pressure (audible) / Air cleaner restriction / Fasten seat belt / Park brake	
Electronic monitor with additional gauges Engine oil pressure / Engine coolant temperature	■
Single 12-volt low-maintenance battery, 190-min. reserve capacity, 950 CCA	●
Dual 12-volt low-maintenance batteries, 380-min. reserve capacity, 1,900 CCA total	■
65-amp sealed alternator with ROPS	●
Power port, 20 amps, for phone and radio	■
Tachometer*	■
HYDRAULIC SYSTEM	
15-gpm fixed-displacement hydraulic gear pump	●
Hydraulic pump with through-drive for winch or auxiliary pump	■
Low-effort T-bar blade control	●
Independent hydraulic reservoir with sight gauge	●
Vertical spin-on hydraulic filter	●
O-ring face seal hydraulic connectors	●
Three-function hydraulic valve	●
Four- and five-function valves with levers, without float	■
Four- and five-function valves with levers, with float*	■
Power-beyond section for front/rear attachments*	■
Rear auxiliary plumbing	■
UNDERCARRIAGE	
57-in. (1397 mm) track gauge for standard-length track frame (77 in. [1887 mm] track on ground)	●
57-in. (1397 mm) track gauge for LT (86-in. [2107 mm] track on ground)	■
65-in. (1593 mm) track gauge for LPG (86-in. [2107 mm] track on ground)	■
Single-flange rollers	●
Double-flange rollers*	■
Full-length smooth-surface track frame covers	●
Chain guides, front and rear (bolt-on)	●
Fully protected track-tension adjusters Grease adjustable	●
Solid sprocket	●
Sprocket rock guards (bolt-on)	●
Bolt-on full-length track-roller rock guards	■
Sealed track chains	●
Sealed and lubricated track chains	■
Grouser shoes, 16-in. (392 mm) single bar closed center	●
Grouser shoes, 14-in. (343 mm) single bar closed center	■
Grouser shoes, 24-in. (588 mm) single bar closed center	■
Swamp shoes, self-cleaning pyramid-shape*	■
Rubber or polymer track shoe pads*	■
Open-center track shoes*	■
Special track shoes*	■
Special track gauge*	■
Heavy-duty track idler springs*	■
LIGHTS	
Less lights	●
Grille-mounted driving lights (2), with rear light (1), halogen – 2,000 candle-power each	■
High-intensity work lights, front (2) and rear (2), with steel guards, 65 watts each	■
OPERATOR'S STATION	
Modular ROPS/FOPS canopy, isolation mounted – Conforms to SAE J1040	●
Under-seat ROPS heater, 30,000 Btu/hr	■
Air conditioning, 24,000 Btu/hr	■
Modular ROPS/FOPS cab, isolation mounted – Conforms to SAE J1040	■
Fresh air intake cab heater/defroster/pressurizer, 18,000 Btu/hr with air precleaner / Dome light / Deluxe headliner with molded air ducts for heater, defroster, and air conditioner / 30,000 Btu/hr under-seat heater / Front windshield and doors, wipers and washers / Tinted safety glass / Antenna for radio / 95-amp alternator	
Right and left access	●
Slip-resistant front-mounting steps	●
Ergonomically located handholds	●
Headliner	●
Floormat	●
Adjustable footrests	●
Adjustable full-length armrests	●
Built-in Operator's Manual storage	●
Suspension vinyl seat – Conforms to SAE J899	●
Fore and aft/weight and height combined adjustment / Adjustable leg support / Seat belt, 2 in. (51 mm), retractable with CRS – Conforms to SAE J386	
Deluxe suspension vinyl or cloth seat – Conforms to SAE J899	■
Fore and aft/weight and height combined adjustment / Adjustable leg support / Adjustable backrest angle / Adjustable lumbar support / Adjustable seatback extension / Seat belt, 3 in. (76 mm), retractable with CRS – Conforms to SAE J386	
Seat belt, 3 in. (76 mm), retractable with CRS – Conforms to SAE J386	■
Convex interior rearview mirror	●
Accessories	■
Convex wide-angle interior rearview mirror / Knee cushions (2) / Seat-side lockable storage box/lunch box/cup holder	
Rear window wiper and washer for cab	■
Radio, AM/FM weatherband	■
Complete enclosure ROPS-to-cab conversion panels	■
Rear-and-side-only enclosure panels	■
Front windshield and doors enclosure panel	■
Fire extinguisher*	■
OVERALL VEHICLE	
One-piece unitized construction mainframe	●
Front tow loop (bolt-on)	●
Reinforced engine and mid-frame bottom guards	●
Integral transmission guard	●
Heavy-duty louvered grille	●
Perforated engine side shields	●
Vandal protection lock provisions for:	●
Engine service access cover / Fuel fill / Hydraulic reservoir fill/check / Transmission reservoir fill/check / Instrument panel	
Solid hood (painted gray for reduced glare)	●
Lockable grease gun/tool storage compartment in right access door	●
Environmental drains	■
Chrome exhaust stack	■
Trademarks/decals, French or Spanish	■
Transport lift and tie-down rings*	■
PROTECTION PACKAGES	
Extreme-duty louvered grille and hose protection	■
Limb risers, arched or point-to-point (bolt-on)	■
Operator-protective rear screen (ROPS or cab)	■
Operator-protective side screens (ROPS)	■
Operator-protective full-screen package (ROPS or cab)	■
Heavy-duty engine air-intake guard	■
Air-conditioning module guard	■
ATTACHMENTS	
Counterweight, rear, 330 lb. (150 kg) each	■
Counterweight, front, 240 lb. (109 kg) each	■
Retrieval hitch with pin	■
Extended rigid drawbar with pin for pull-type implements	■
Drawbar, extended for winch (with or without Fairlead)	■
Ripper, parallelogram with five shank pockets and three teeth	■
Winch, standard or low speed	■
Winch, power in/power out standard speed	■
Winch, power in/power out low speed	■
Four-roller fairlead for winch	■
Log arch for winch	■
Automatic blade control*	■
Grapple, skidding*	■
Root-rake blade attachment*	■
Root rakes in place of blade*	■
Fireline plow*	■
Front- or rear-mounted hydraulic winch*	■
Water tanks for fire suppression*	■
Pull-type choppers*	■
Cable plow*	■
Pull-type scraper*	■
Side boom*	■
Roller compactor*	■

KEY: ● Standard equipment ■ Optional or special equipment

*See your John Deere dealer for further information.

JOHN DEERE

Net engine power is with standard equipment including air cleaner, exhaust system, alternator, and cooling fan, at standard conditions per SAE J1349 and DIN 6270B, using No. 2-D fuel at 38 API gravity. No derating is required up to 5,000 ft. (1500 m) altitude. Gross power is without cooling fan.

Specifications and design subject to change without notice. Wherever applicable, specifications are in accordance with SAE standards. Except where otherwise noted, specifications are based on units with standard equipment, rollover protective structures, full fuel tanks, and 175-lb. (79 kg) operators. 450H standard/LT units with 97-in. (2377 mm) blade and 16-in. (406 mm) track shoes; and 450H LGP unit with 124-in. (3038 mm) blade and 24-in. (610 mm) track shoes.

SAFETY live with it

DKA450H Litho in U.S.A. (99-01)

Courtesy of Machine.Market