Load Rating Chart

Model 3577C & 3577T

© Manitex

NOTE: Additional copies of this Load Rating Chart can be purchased from your Manitex Distributor. When ordering, use the part number shown in the bottom left corner of this page.

Courtesy of Crane.Market

RANGE DIAGRAM
- FULL SPREAD CONFIGURATION -

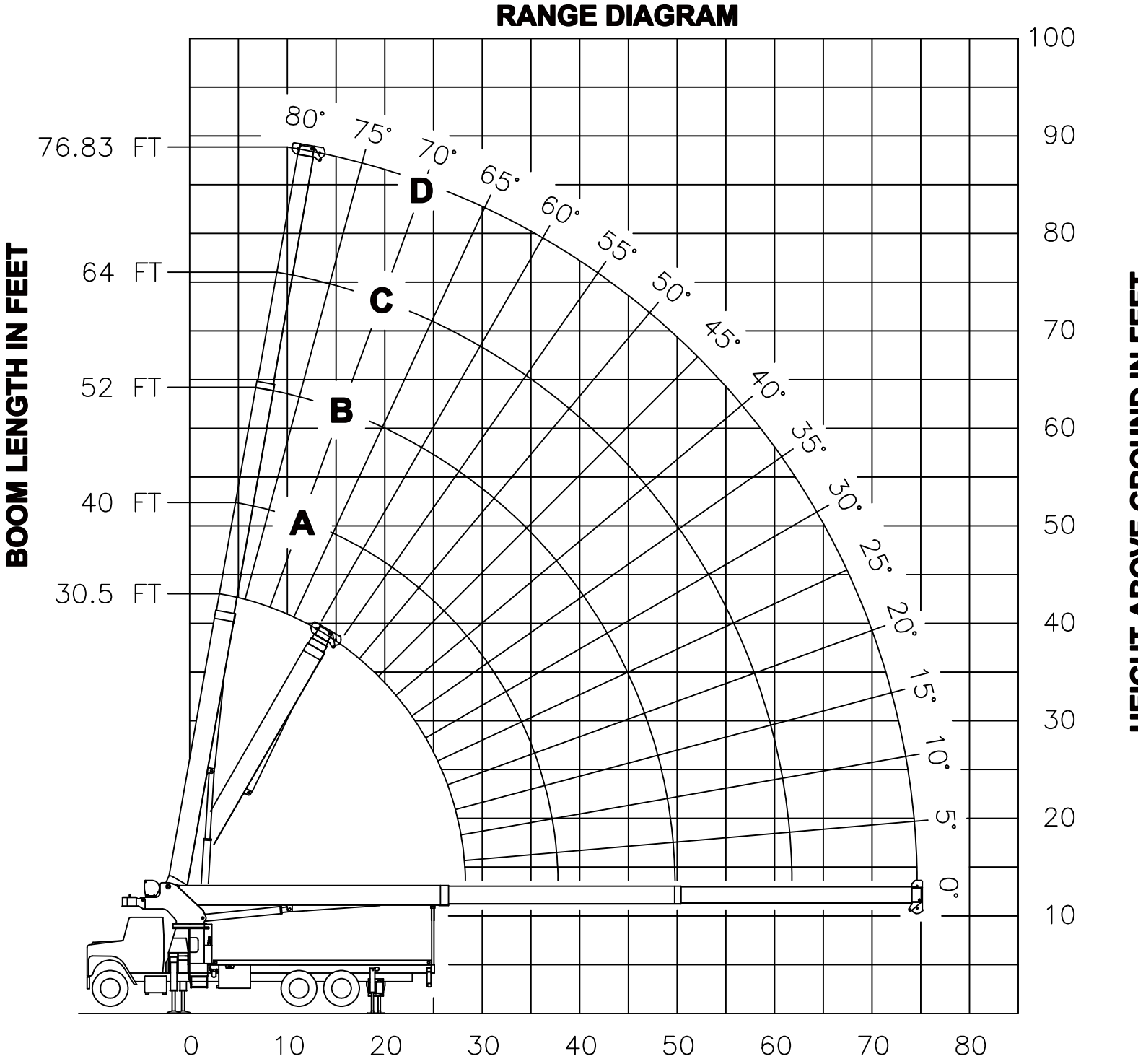

7300085-001 A

Courtesy of Crane.Market

USE THIS CHART ONLY WHEN OUTRIGGERS AND STABILIZERS ARE FULLY EXTENDED

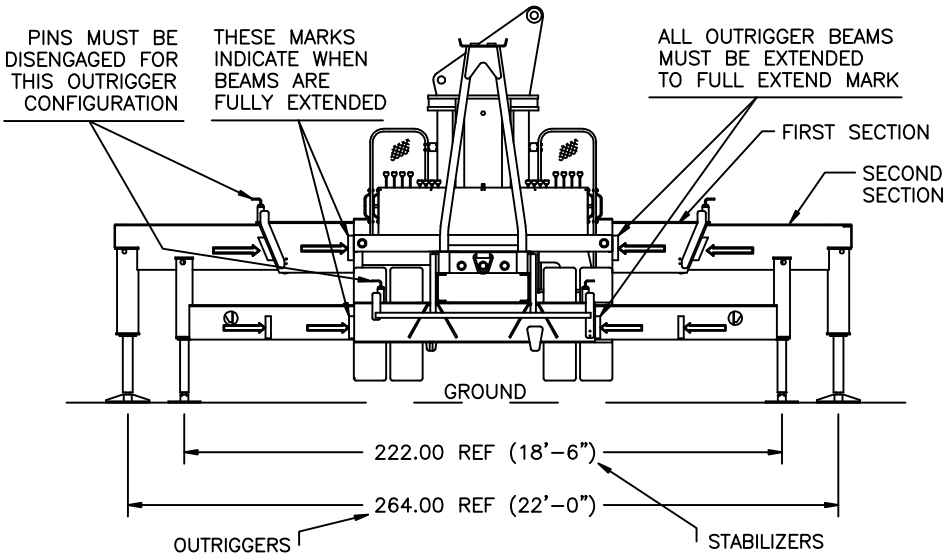

- FULL SPREAD CONFIGURATION -

LOAD RATINGS IN LBS WITH OUTRIGGERS AND STABILIZERS EXTENDED

LMI CODE #1

OPERATING RADIUS FT	LOADED BOOM ANGLE / BOOM LENGTH AND MARKER		A		B		C		D	
	∠°	30.5 FT	∠°	40 FT	∠°	52 FT	∠°	64 FT	∠°	76.83 FT
6	80	70000								
8	75	54700	79	52620						
10	71	46840	76	44750	80	43120				
12	67	40980	73	38930	78	37490	80	36420		
15	61	34780	69	32850	74	31260	78	30190	80	28500
20	48	25310	60	25460	68	24710	73	23690	77	22900
25	32	19220	51	19400	62	19520	68	19440	73	18800
30			40	15020	55	15170	63	15250	69	15310
35			26	11560	48	11690	58	11770	65	11820
40					39	9310	52	9380	60	9430
45					28	7580	46	7650	55	7690
50							39	6330	51	6370
55							30	5290	45	5330
60							17	4450	39	4490
65									32	3800
70									23	3220

Courtesy of Crane.Market

RANGE DIAGRAM
- INTERMEDIATE SPREAD CONFIGURATION -
(MID EXTEND)

RANGE DIAGRAM

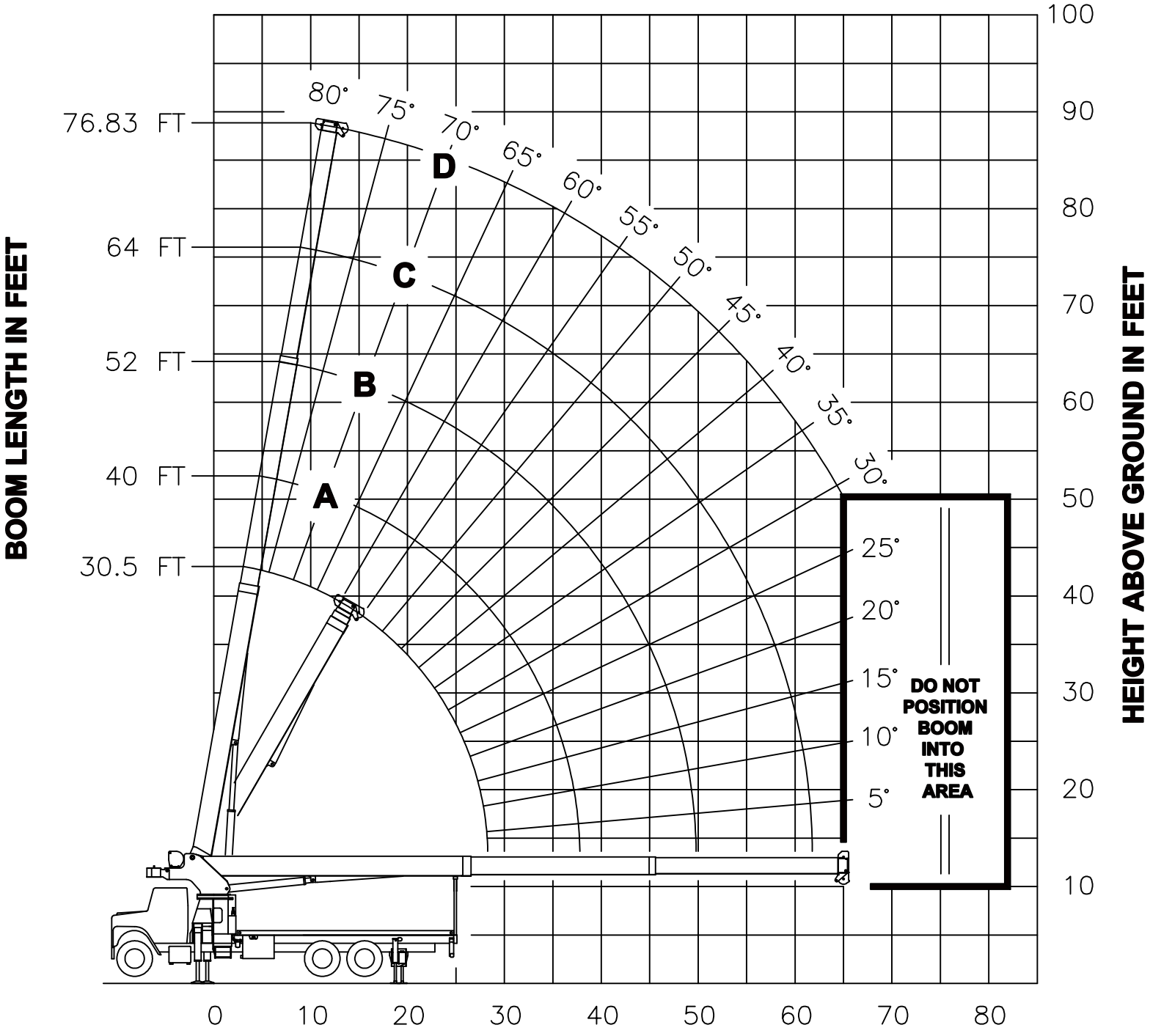

OPERATING RADIUS FROM CENTERLINE OF ROTATION IN FEET

7300085-001 A

NOTE : **LIFTING PERSONNEL WITH CRANE IN THIS OUTRIGGER CONFIGURATION IS STRICTLY PROHIBITED. USE ONLY FULLY EXTENDED OUTRIGGER CONFIGURATION WHEN LIFTING PERSONNEL.**

Courtesy of Crane.Market

USE THIS CHART ONLY WHEN FRONT OUTRIGGERS AND REAR STABILIZERS ARE IN THE INTERMEDIATE POSITION

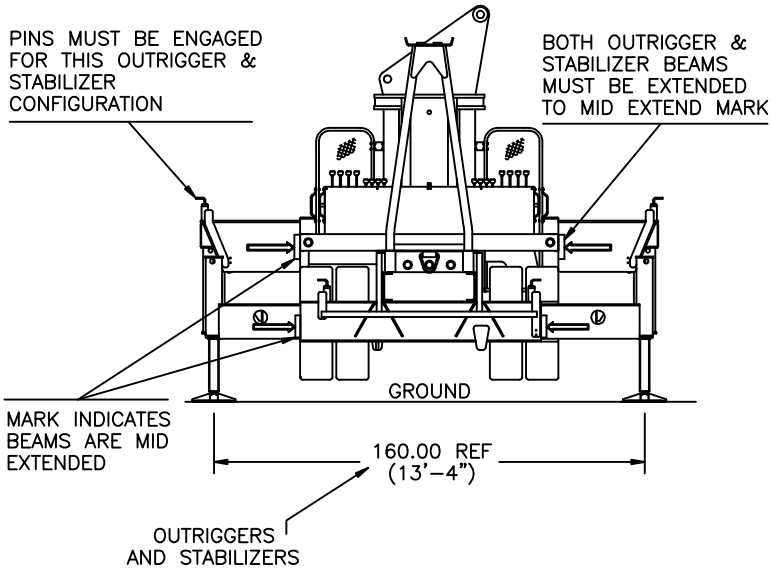

- INTERMEDIATE SPREAD CONFIGURATION - (MID EXTEND)

MAIN BOOM LOAD RATINGS IN LBS

LMI CODE #9

OPERATING RADIUS FT	LOADED BOOM ANGLE / BOOM LENGTH AND MARKER		A		B		C		D	
	∠°	30.5FT	∠°	40 FT	∠°	52 FT	∠°	64 FT	∠°	76.83FT
6	80	70000								
8	75	54700	79	52620						
10	71	46840	76	44750	80	43120				
12	67	40980	73	38930	78	37490	80	36240		
15	61	24930	69	25200	74	25400	78	25520	80	25610
20	48	14170	60	14400	68	14550	73	14650	77	14710
25	32	9270	51	9480	62	9620	68	9700	73	9760
30			40	6670	55	6800	63	6880	69	6920
35			26	4860	48	4980	58	5050	65	5090
40					39	3700	52	3770	60	3810
45					28	2760	46	2820	55	2860
50							39	2100	51	2130
55							30	1520	45	1550
60							17	1050	39	1080
65									32	690

Courtesy of Crane.Market

ALLOWABLE LINE PULL

1 PART LINE	2 PART LINE	3 PART LINE	4 PART LINE	5 PART LINE	6 PART LINE	7 PART LINE	8 PART LINE	WARNING
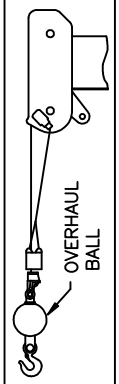	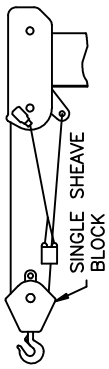	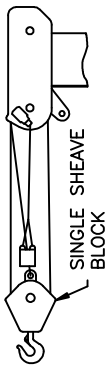	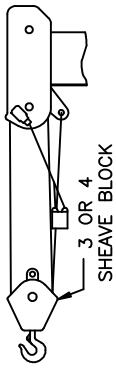	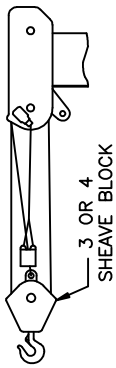	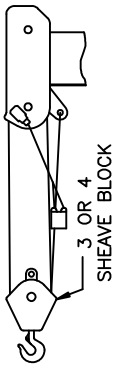	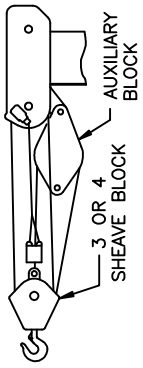	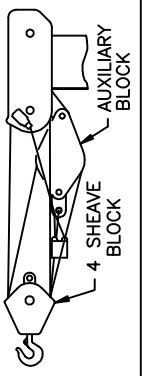	ANTI–TWO–BLOCK SYSTEM MUST BE IN GOOD OPERATING CONDITION BEFORE OPERATING CRANE. REFER TO THE OWNER'S MANUAL. KEEP AT LEAST 3 WRAPS OF LOAD LINE ON THE DRUM AT ALL TIMES.
9080 LBS	18160 LBS	27240 LBS	36320 LBS	45400 LBS	54480 LBS	63560 LBS	70000 LBS	5/8" ROT RESISTANT (5.0:1 SF) – 45400 LBS MIN BREAKING STRENGTH
9500 LBS	19000 LBS	28500 LBS	38000 LBS	47500 LBS	57000 LBS	66500 LBS	70000 LBS	5/8" 6 X 25 IWRC (3.5:1 SF) – 33250 LBS MIN BREAKING STRENGTH

AREA OF OPERATION

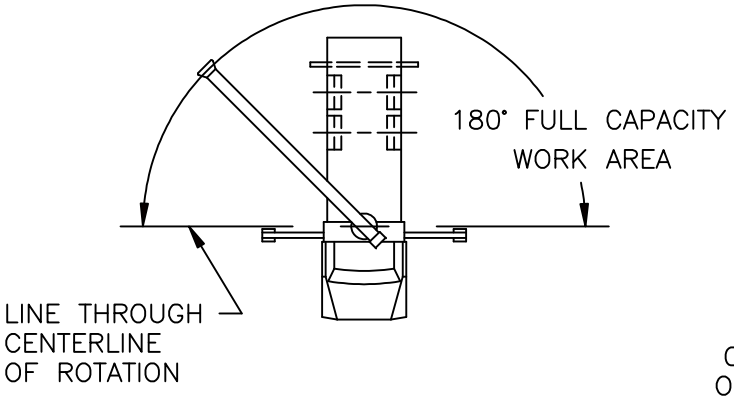

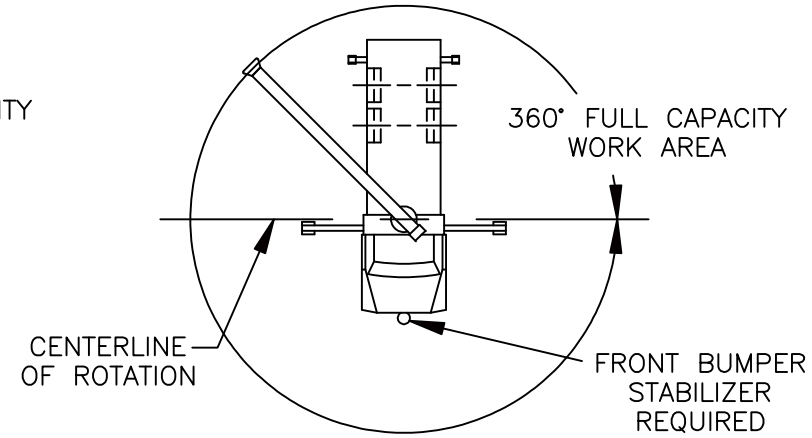

DEDUCTIONS FROM RATED LOADS FOR LOAD HANDLING DEVICES SUPPLIED BY MANITEX

AUXILIARY BLOCK — — — — — — — — — — — — 50 LBS
OVERHAUL BALL — — — — SEE OVERHAUL BALL MANUFACTURER NAMEPLATE
LOAD BLOCK — — — — — — — SEE BLOCK MANUFACTURER NAMEPLATE
HOSE REEL — — — — — — — — — — — — — 260 LBS

Courtesy of Crane.Market

LMI OPERATING CODES

SETTING	CRANE CONFIGURATION	OUTRIGGER CONFIGURATION
#1	MAIN BOOM	FULLY EXTENDED
#5	PERSONNEL LIFTING PLATFORM ON MAIN BOOM	FULLY EXTENDED
#9	MAIN BOOM	INTERMEDIATE

WARNING

1. THE OPERATOR MUST READ AND UNDERSTAND THE OWNER'S MANUAL BEFORE OPERATING THIS CRANE.

2. POSITIONING OR OPERATION OF CRANE BEYOND AREAS SHOWN ON THIS CHART IS NOT INTENDED OR APPROVED EXCEPT WHERE SPECIFIED IN OWNER'S MANUAL.

3. LOADED BOOM ANGLES AT SPECIFIED BOOM LENGTHS GIVE ONLY AN APPROXIMATION OF THE OPERATING RADIUS. THE BOOM ANGLE BEFORE LOADING SHOULD BE GREATER TO ACCOUNT FOR DEFLECTIONS. DO NOT EXCEED THE OPERATING RADIUS FOR RATED LOADS.

4. FOR BOOM LENGTHS NOT SHOWN, USE RATING OF NEXT SHORTER OR LONGER BOOM LENGTH, WHICHEVER IS LESS. FOR RADII NOT SHOWN, USE RATING OF NEXT LONGER RADIUS.

5. CRANE LOAD RATINGS ON OUTRIGGERS ARE BASED ON FREELY SUSPENDED LOADS WITH THE MACHINE LEVELED AND STANDING ON A FIRM UNIFORM SUPPORTING SURFACE. NO ATTEMPT SHALL BE MADE TO MOVE A LOAD HORIZONTALLY ON THE GROUND IN ANY DIRECTION.

6. PRACTICAL WORKING LOADS DEPEND ON SUPPORTING SURFACE, WIND, AND OTHER FACTORS AFFECTING STABILITY SUCH AS HAZARDOUS SURROUNDINGS, EXPERIENCE OF PERSONNEL, AND PROPER HANDLING, ALL OF WHICH MUST BE TAKEN INTO ACCOUNT BY THE OPERATOR.

7. THE MAXIMUM LOAD WHICH MAY BE TELESCOPED IS LIMITED BY HYDRAULIC PRESSURE, BOOM ANGLE, AND BOOM LUBRICATION. IT IS SAFE TO ATTEMPT TO TELESCOPE ANY LOAD WITHIN THE LIMITS OF THE LOAD RATING CHART.

8. 360° AREA OF OPERATION IS ONLY VALID WITH THE USE OF A FRONT BUMPER STABILIZER.

Courtesy of Crane.Market

INFORMATION

1. DEDUCTIONS MUST BE MADE FROM RATED LOADS FOR OPTIONAL ATTACHMENTS, HOOKS, AND LOADBLOCKS (SEE DEDUCTION CHART). WEIGHTS OF SLINGS AND ALL OTHER LOAD HANDLING DEVICES SHALL BE CONSIDERED A PART OF THE LOAD.

2. LOAD RATINGS ABOVE THE HEAVY LINE ARE STRUCTURALLY LIMITED CAPACITIES. LOAD RATINGS BELOW THE HEAVY LINE ARE STABILITY LIMITED CAPACITIES AND DO NOT EXCEED 85% OF TIPPING.

DEFINITIONS

1. OPERATING RADIUS IS THE HORIZONTAL DISTANCE FROM THE AXIS OF ROTATION TO THE CENTER OF THE VERTICAL HOIST LINE OR TACKLE WITH LOAD APPLIED.

2. LOADED BOOM ANGLE AS SHOWN IN THE COLUMN HEADED BY ∠ , IS THE INCLUDED ANGLE BETWEEN THE HORIZONTAL AND LONGITUDINAL AXES OF THE BOOM BASE AFTER LIFTING RATED LOAD AT RATED RADIUS.

Courtesy of Crane.Market