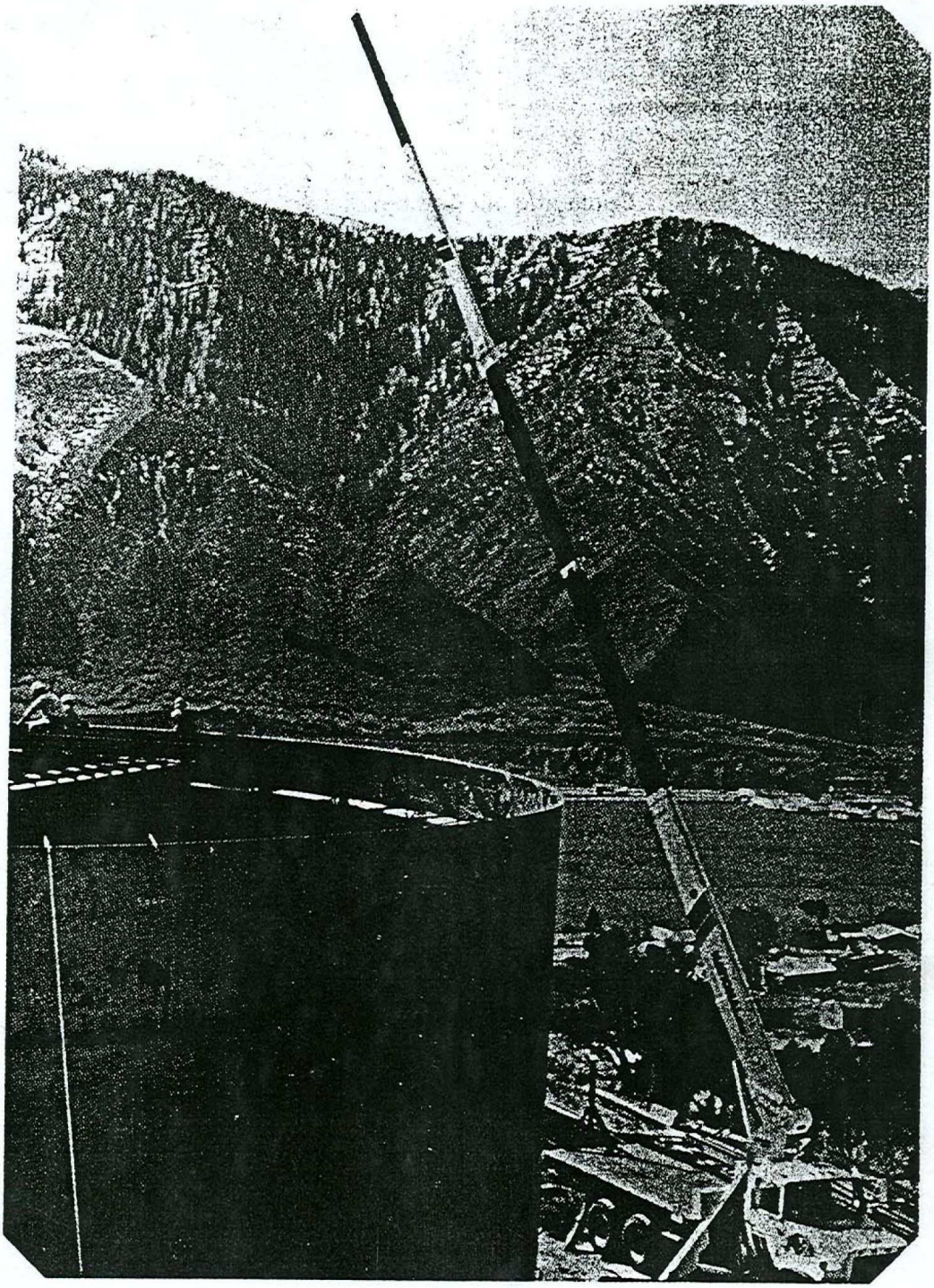

NATIONAL SERIES 800

TELESCOPING CRANES

LOAD RATINGS FOR AVAILABLE BOOM AND JIB OPTIONS

Courtesy of Crane.Market

NATIONAL SERIES 800
LOAD RATINGS FOR AVAILABLE BOOM AND JIB OPTIONS

The capacities shown will be reduced when accessories are attached to the boom or loadline.

Boom and Jib Combinations

Telescoping Booms

- Model 839 ..... 22- to 39-foot 2-section
- Model 856 ..... 22- to 56-foot 3-section
- Model 875 ..... 22- to 75-foot 4-section

Jib Options (Side-Stowing)

- 21-foot straight (for Models 839, 856, 875)
- 21- to 35-foot manual pull-out (for Models 839, 856, 875)
- 21- to 55-foot swing under/manual pull-out (for Model 875)
- 15-foot angling jib (for Models 856, 875)

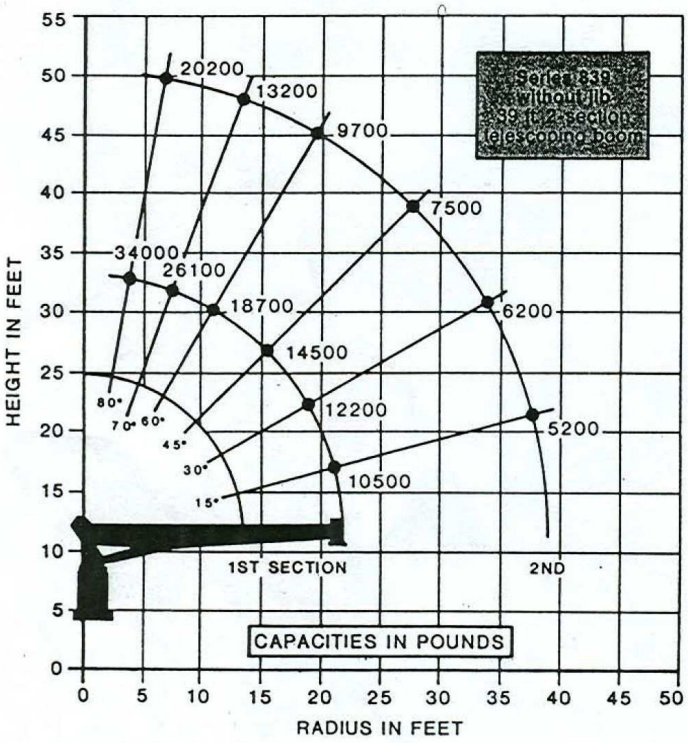

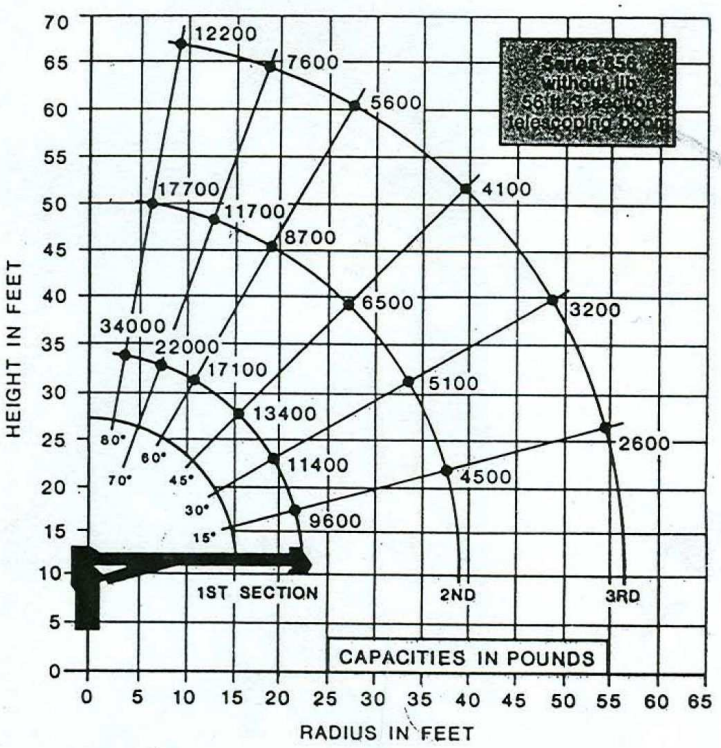

Planetary Winch Data—Series 839 & 856

	1 Part	2 Part	3 Part	4 Part
Std. Speed Std. Line Pull	150 F.P.M. 8,400 Lbs.	75 F.P.M. 16,800 Lbs.	50 F.P.M. 25,000 Lbs.	37 F.P.M. 34,000 Lbs.
Burst-of-Speed Line Pull	240 F.P.M. 3,000 Lbs.	120 F.P.M. 6,000 Lbs.	80 F.P.M. 9,000 Lbs.	60 F.P.M. 12,000 Lbs.

Caution
Do not dead head line block against boom tip when extending boom. Keep at least 3 wraps of line on drum at all times. Use only 9/16" diameter cable on this machine. Average breaking strength of wire rope 29,750 pounds. Maximum allowable 3.5:1 line pull at design factor is 8,500 pounds.

Planetary Winch Data—Series 875

	1 Part	2 Part	3 Part	4 Part
Std. Speed Std. Line Pull	164 F.P.M. 7,500 Lbs.	80 F.P.M. 15,000 Lbs.	55 F.P.M. 22,500 Lbs.	40 F.P.M. 34,000 Lbs.
Burst-of-Speed Line Pull	260 F.P.M. 3,000 Lbs.	130 F.P.M. 6,000 Lbs.	85 F.P.M. 9,000 Lbs.	65 F.P.M. 12,000 Lbs.

Maximum bare drum pulls are 10,200 pounds, but because of the 3.5 to 1 OSHA safety factor, maximum rated pull on a single line cannot exceed 8,500 pounds.

Courtesy of Crane.Market

IMPORTANT INFORMATION AND CAUTIONS

Do not operate cranes or accessories within 10 feet of live power lines.

1. Load ratings shown on the above charts are maximum allowable loads with the outriggers properly extended on a firm, level surface and the crane leveled and mounted in a factory-recommended configuration.
2. Always level the crane with the level indicator located on the crane frame.
3. The operator must reduce loads to allow for factors such as wind, ground conditions, operating speeds and the effect of freely suspended loads.
4. Overloading the crane may cause structural collapse or instability.
5. Weights of any accessories attached to the boom or loadline must be deducted from the load chart capacities.
6. Do not exceed jib capacities at any reduced boom length.

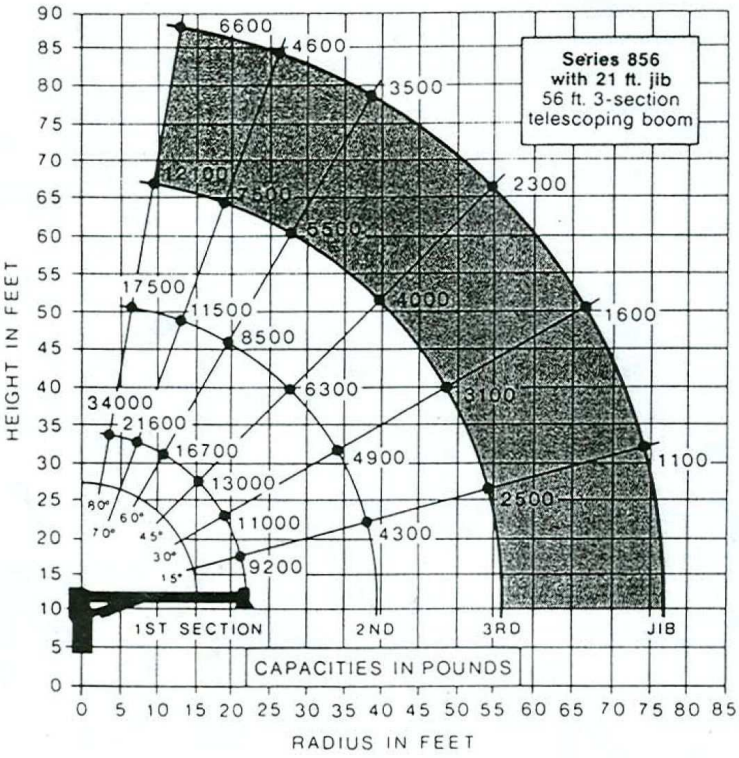

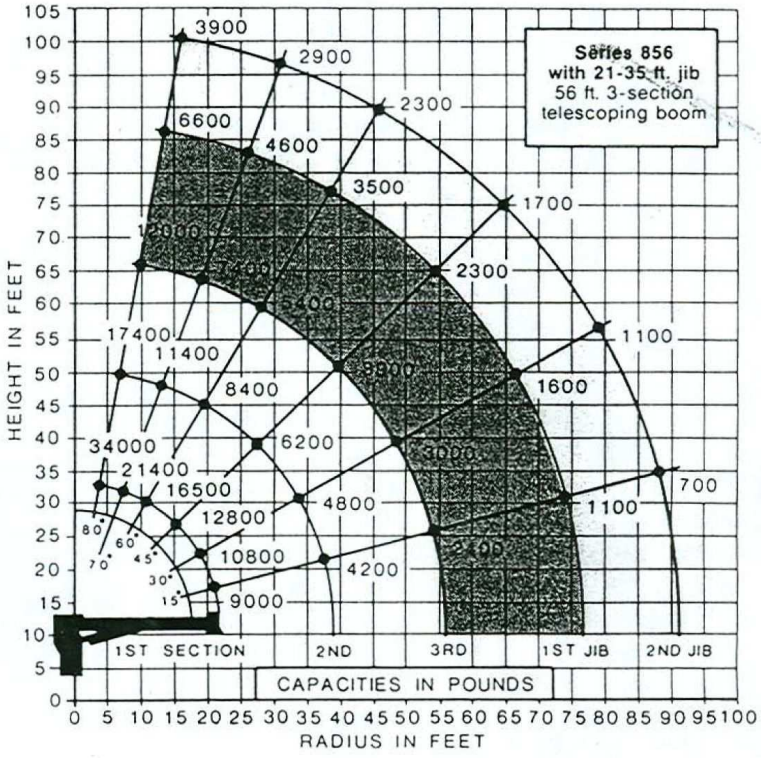

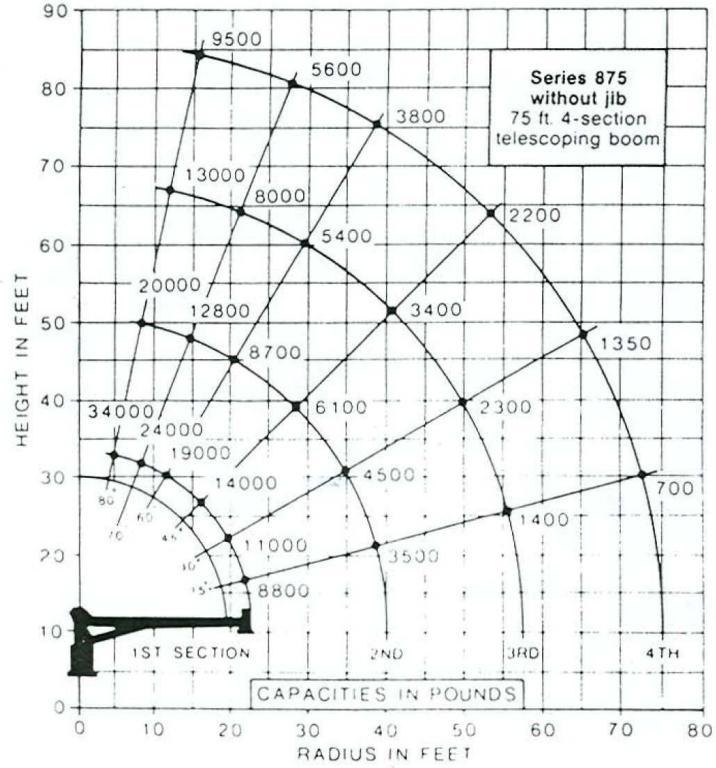

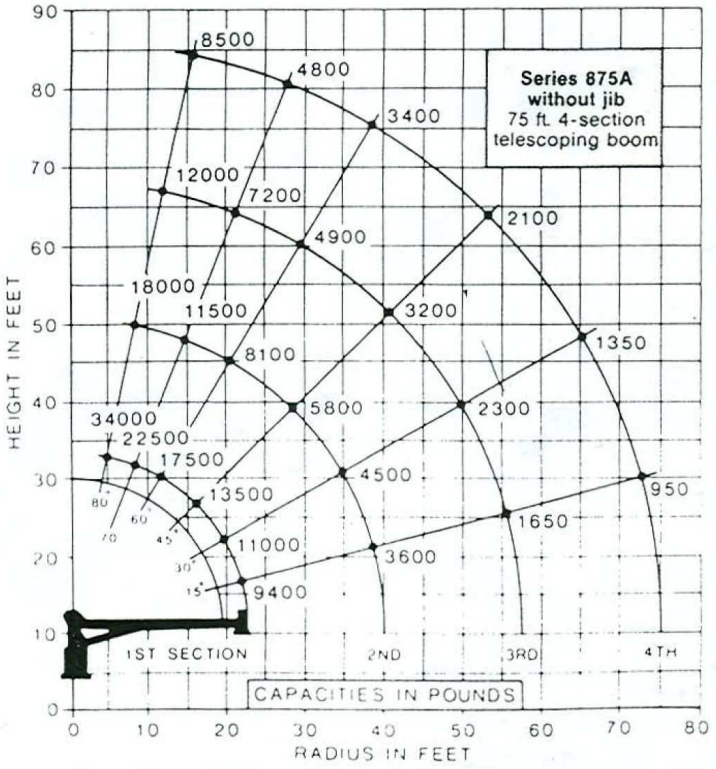

The Series 875A is equipped with National's self-stowing auger.

Courtesy of Crane.Market

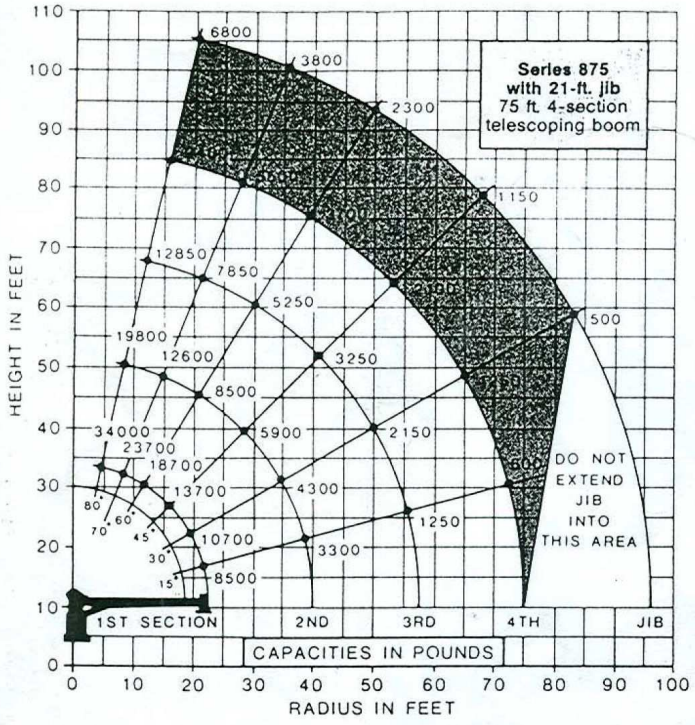

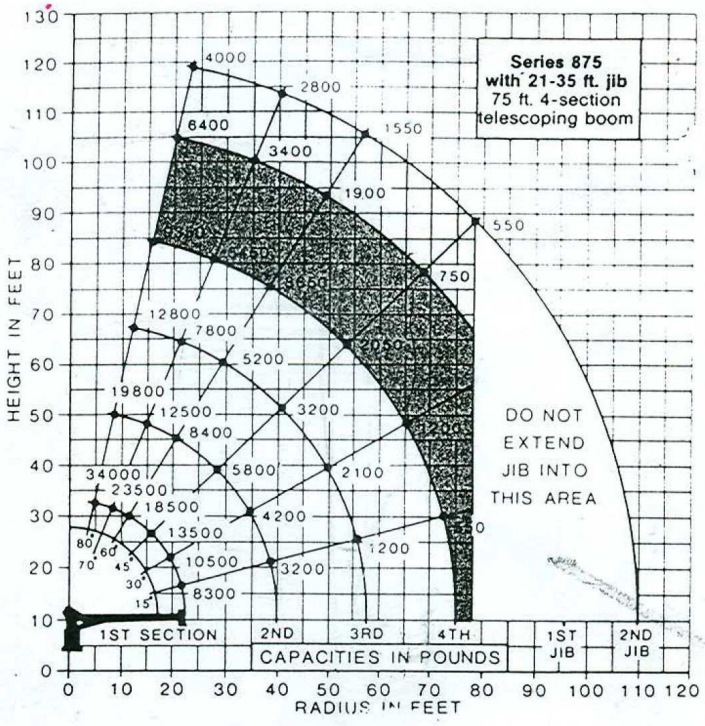

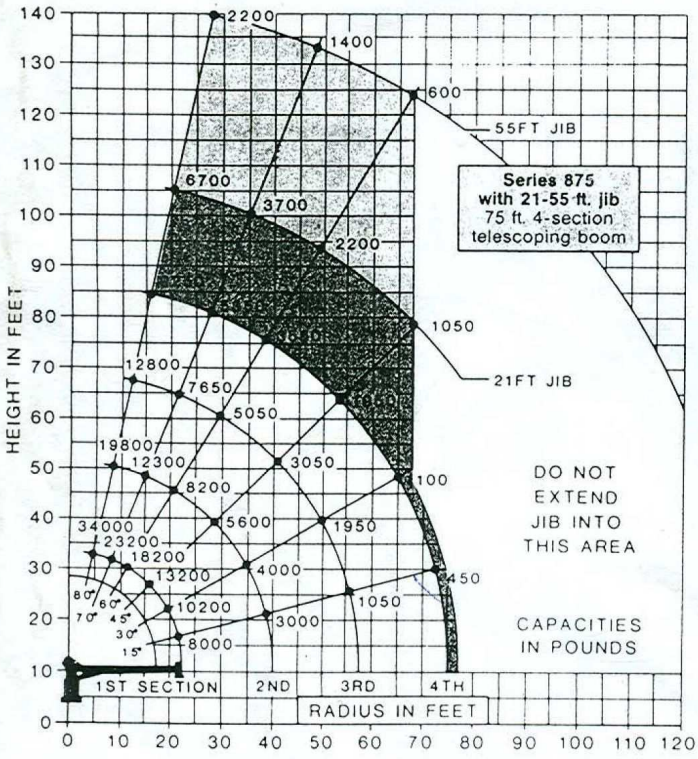

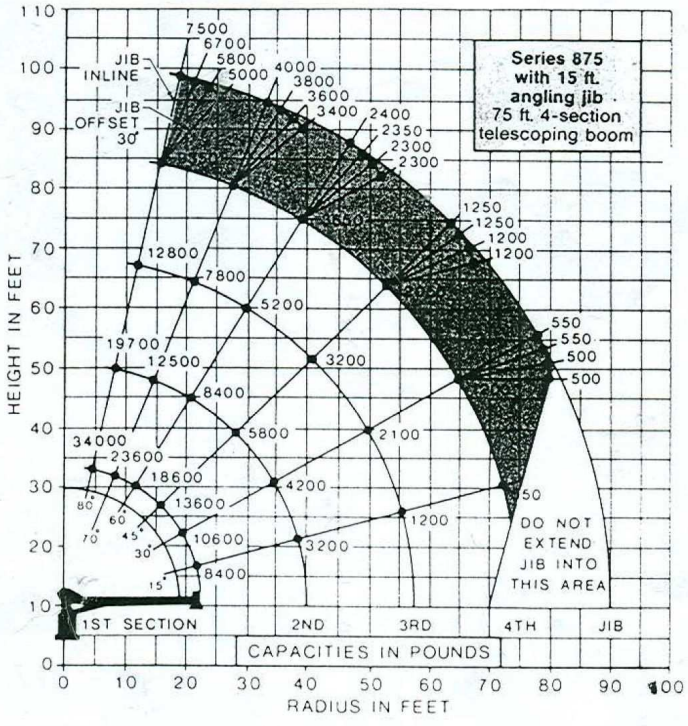

NATIONAL CRANE
Subsidiary of Kidde Inc
KIDDE

General Offices:
11200 North 148th Street • Waverly, NE 68462 • (402) 786-2240
Service Center:
701 N.W. 27th Street • Lincoln, NE 68528 • (402) 474-2666

National reserves the right to change designs, prices and specifications at any time without notice

S800LR6833M Printed in the United States © 1983 National Crane

Courtesy of Crane.Market