SERAM
LIFTING BALANCED CRANES

S125

S125.20E / S125.25E/ S125.30E

160 kW

20 m / **30** m
66 ft / **98** ft

97 t / **167** t
107 USt / **184** USt

Courtesy of Crane.Market

THE SERAM HYDRAULIC BALANCING
THE EASY AND EFFICIENT SOLUTION

S125
S125.20E / S125.25E / S125.30E

The SERAM crane is the only balanced crane by hydraulic system

- No mechanical link -> No connecting rod
- Low constraints on the structure
- Quick and accurate movements

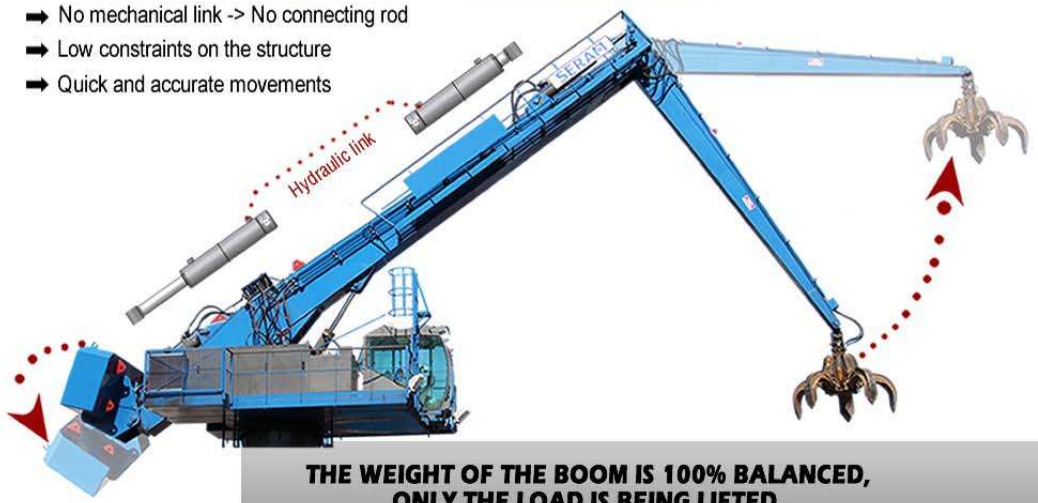

THE WEIGHT OF THE BOOM IS 100% BALANCED, ONLY THE LOAD IS BEING LIFTED.

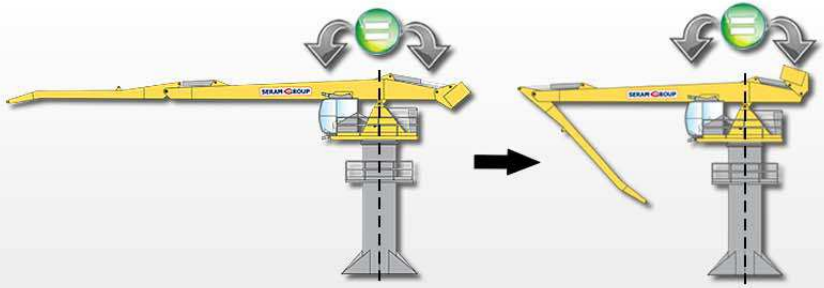

Enjoy the unique advantages of the balanced crane

Unequaled operating costs

Up to 80% energy consumption compared to a diesel conventional crane

	Diesel Conventional Crane
- 50%	Electric Conventional Crane
- 80%	SERAM Electric Balanced Crane

An exceptional lifetime of the hydraulic components

The average working pressure of a SERAM crane is 55% lower than a conventional crane.

~320 bars ~4650 psi	Conventional Crane
~140 bars ~2030 psi	SERAM Balanced Crane

THE SERAM TECHNOLOGY

THE SERAM STRUCTURE
THE RELIABILITY

World Reference...

FEM CLASSIFICATION*
A8M8
The most performing grade on the market

→ **+ of 2 Millions of lifting cycles**

→ **+ of 20 Years of operating**

→ **+ of 40 000 Hours of working operation**

*FEM: European Federation of Materials Handling

THE SERAM MAINTENANCE
THE SIMPLICITY

All the main components of the crane have an easy access

The SERAM DATA
(System of assistance to diagnosis)
Direct location on the dashboard of the cabin

THE HYDRAULIC UNIT
Direct access from the lateral platform

A SINGLE CYLINDER
(The 3 cylinders are identical and interchangeable)

DIPPER ARM CYLINDER
Direct access from the maintenance walkway

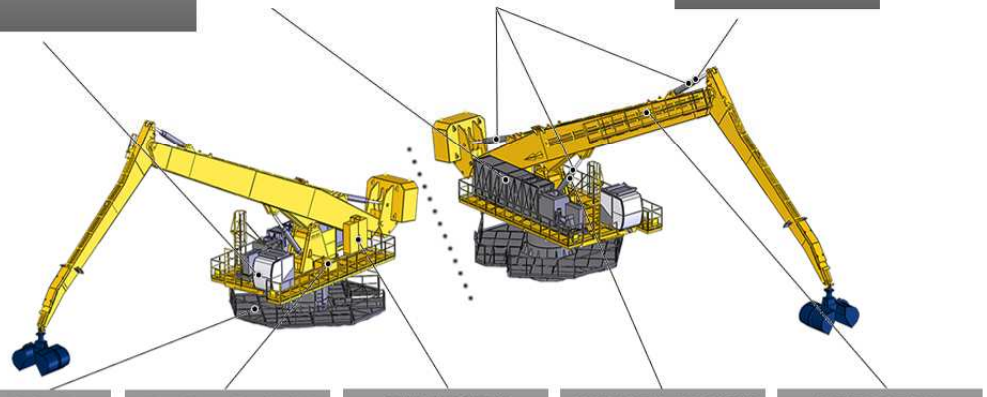

THE RING GEAR
(External toothing / 100% visible)
Direct access from the intermediate platform

THE SWING MOTOR
Direct acces from the lateral platform

THE ELECTRIC CABINET
(Raised cabinet to have an easier access to the cables)
Direct acces from the lateral platform

MAIN ARM CYLINDER
Direct access from the central platform

LUBRICATION
(Centralized manual lubrication points on the maintenance walkway)

Courtesy of Crane.Market

S125

S125.20E / S125.25E / S125.30E

SPECIFICATIONS

MAIN FEATURES

	S125.20E		S125.25E		S125.30E	
Power	125 t.m	*42.0 USt.ft*	125 t.m	*42.0 USt.ft*	125 t.m	*42.0 USt.ft*
Maximum horizontal outreach	20 m	*66 ft*	25 m	*82 ft*	30 m	*98 ft*
Length of the main arm	11.5 m	*38 ft*	14 m	*46 ft*	17 m	*56 ft*
Length of the dipper arm	8.5 m	*28 ft*	11 m	*36 ft*	13 m	*43 ft*

ELECTRIC MOTOR

Power	160 kW (400 volts - 50 hertz) / *(480 volts - 60 hertz)*
Type of starting	By variable frequency drive

DIESEL GENERATOR *(For crawlers only)*

Power	350 kVA

HYDRAULIC SYSTEM

Type of the hydraulic system	Load Sensing
Hydraulic pumps	Regulating pumps with Load Sensing regulation
Pump flow for the movements	510 l/min / *135 gal/min*
Average working pressure	150 Bars / *2176 psi*
Pump flow for the rotation	380 l/min *(dedicated closed circuit)* / *100 gal/min*
Maximum rotation speed	3.5 tr/min
Hydraulic tank	1600 l / *422 gal*
Cooling	Oil/Air heat exchanger

WORKING EQUIPMENT

Hydraulic cylinders	250 x 140 x 1750 mm / *9.8 x 5.5 x 68.9 in*
Swing motors	Double radial piston engine with hydraulic safety brake
Ring gears	Crossed rollers with external toothing

SUPPORT

Fixed support (F)	Support fixed on a concrete base		
Dimensions of the anchoring base	5000 x 5000 mm / *16.4 x 16.4 ft*		
Forces applied on the ground	Fz= 1310 kN; Mx=2830 kN.m* *294.5 kipf; 695767 lbf.yd**	Fz= 1360 kN; Mx=2890 kN.m* *305.7 kipf; 710518 lbf.yd**	Fz= 1450 kN; Mx=2930 kN.m* *326 kipf; 720352 lbf.yd**
Total weight of the machine	97 t / *107 USt*	107 t / *118 USt*	117 t / *129 USt*

Free Standing support (AS)	Support on 4 shoes - No ground anchoring needed - Can be moved if needed		
Dimensions	Base: 6500 x 6500 mm / *21.3 x 21.3 ft* 4 shoes: 1500 x 1500 mm / *4.9 x 4.9 ft*		
Maximum forces applied on a shoe	Fz= 680 kN* / *152.9 kipf*	Fz= 710 kN* / *159.6 kipf*	Fz= 730 kN* / *164.1 kipf*
Total weight of the machine	112 t / *123 UST*	122 t / *134 USt*	132 t / *145 USt*

Trolley on rails (C)	Trolley equipped with 4 boggies, with 2 wheels each		
Dimensions	Wheel base: 6500 x 6500 mm / *21.3 x 21.3 ft* Wheels of Boggies Ø630mm / *2.1 ft*		
Maximum forces applied on a boggie	Fz= 701 kN* / *157.6 kipf*	Fz= 730 kN* / *164.1 kipf*	Fz= 760 kN* / *170.9 kipf*
Total weight of the machine	121 t / *133 USt*	131 t / *144 USt*	141 t / *155 USt*

Crawlers (Ch)	Base: 6500 x 6500 mm / *21.3 x 21.3 ft* Width of the crawlers: 800 mm / *2.6 ft* Speed: 0 to 2 km/h / *0 to 1.2 mph*		
Dimensions			
Pression on the ground	14.1 N/cm²* / *20.5 psi*	15.9 N/cm²* / *23.1 psi*	16.0 N/cm²* / *23.2 psi*
Total weight of the machine	147 t / *162 USt*	157 t / *173 USt*	167 t / *184 USt*

EQUIPMENTS

ACCESS	
Access ladder to the intermediate platform	●
Access stairway to the intermediate platform	*Opt*
Maintenance walkway	●
HYDRAULIC UNIT	
Lateral and upper openings allowing a total access to the hydraulic unit	●
Motor pump support equipped with an anti-vibration system - Noise mitigation	●
Enhanced cooling	*Opt*
Sound insulation	*Opt*
HYDRAULIC EQUIPMENTS	
Cylinders - Single piece chrome steel rods	●
Cylinders - equipped with safety valves and with load limiters	●
Automatic lubrication of the joints and cylinders	●
Automatic lubrication of the tracks and rollers of the gear	●
Automatic lubrication of the toothing of the gear	*Opt*

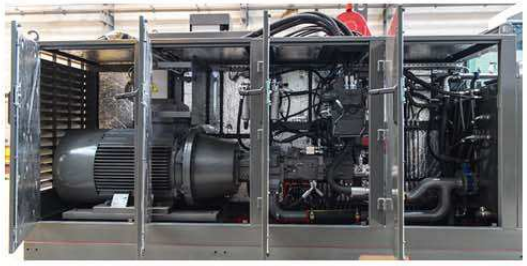

OPERATING CABIN

VISIBILITY	
Panoramic windshield	●
2 Pantograph wipers + windshield washer	●
Adjustable sun shades	●
COMFORT	
Reversible air conditioning on the roof of the cabin	●
Additional fan heater	●
Heat-insulating laminated glass type Securit	●
Lateral polycarbonate glazing	*Opt*
Interior lighting	●
FM radio station / MP3 player	●
Briefcase	●
Hydrocarbon resistant, textured floor mat	●
Electrical outlets 220 volts / 110 volts	●
12V cigare lighter socket	*Opt*
Communication radio	*Opt*
Starting with breath test	*Opt*
Pressurization system of the cabin	*Opt*
Customer's logo on the arm	*Opt*

ELECTRICAL EQUIPMENTS	
Hydraulic collector - 4 power slip rings 3ph+t	●
Hydraulic collector - Additional switching ring	*Opt*
High Voltage / Low Voltage transformer	*Opt*
OPTIONS	
Handling tools (grapple, clamshell, etc)	*Opt*
Automatic Weighing system	*Opt*
Fire hose protection	*Opt*

ERGONOMICS	
Ergonomic suspension seat	●
Adjustable backrest and armrests	●
Adjustable footrest	●
Operating and control panel of the crane	●
Hydraulic joysticks on the armrests	●
SERAM DATA : Control and defect recording module	●
SERAM DATA : GSM module for remote supervision	*Opt*
SERAM VISION : camera support	*Opt*
Anti-collision system: driving assistance	*Opt*
Cabin extension	*Opt*
Guard screen for the windshield	*Opt*
Lighting of the working area: 2 x 400W	●
Additional lighting	*Opt*

Courtesy of Crane.Market

S125

S125.20E / S125.25E / S125.30E

LOAD CHARTS

S125.20E

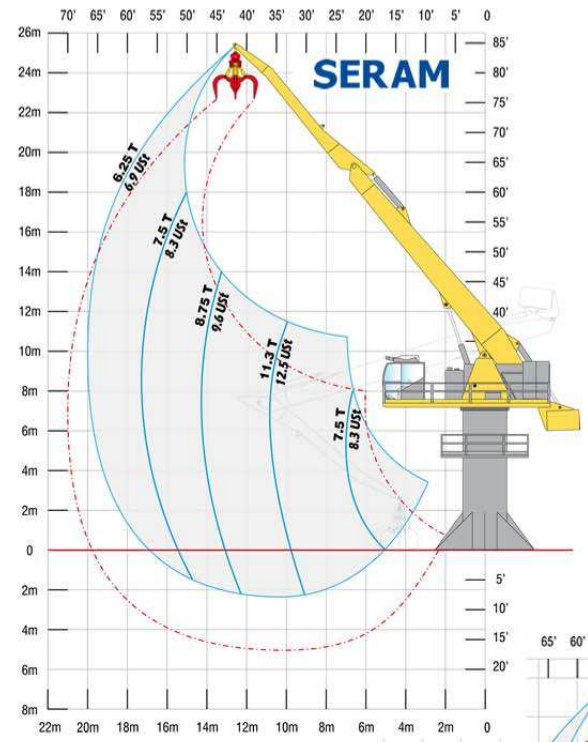

S125.25E

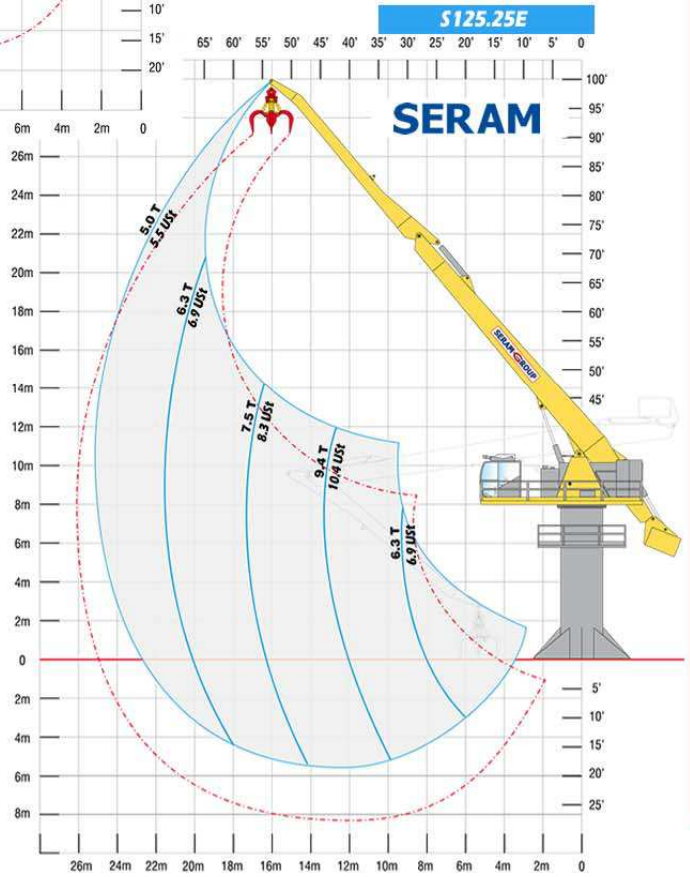

S125.30E

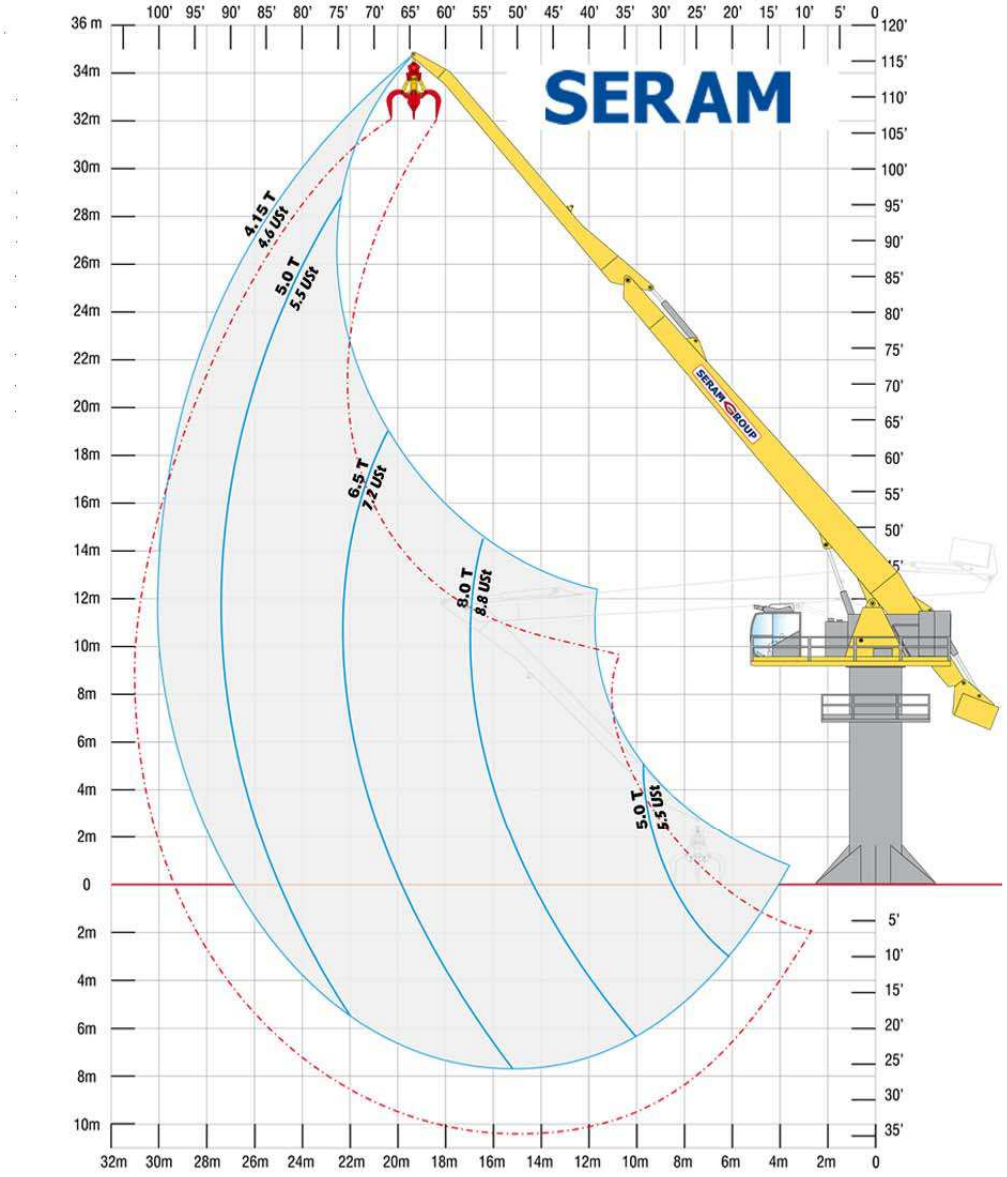

Load charts in Metric Tons and US Tons, valid at the end of the crane's boom without handling tool. According to the A8M8 classification of the FEM (European Federation of Materials Handling). The loading capacities are valid on a 360° working area.

Courtesy of Crane.Market

MODULAR SOLUTIONS

S125

S125.20E / S125.25E / S12530E

Type of boom

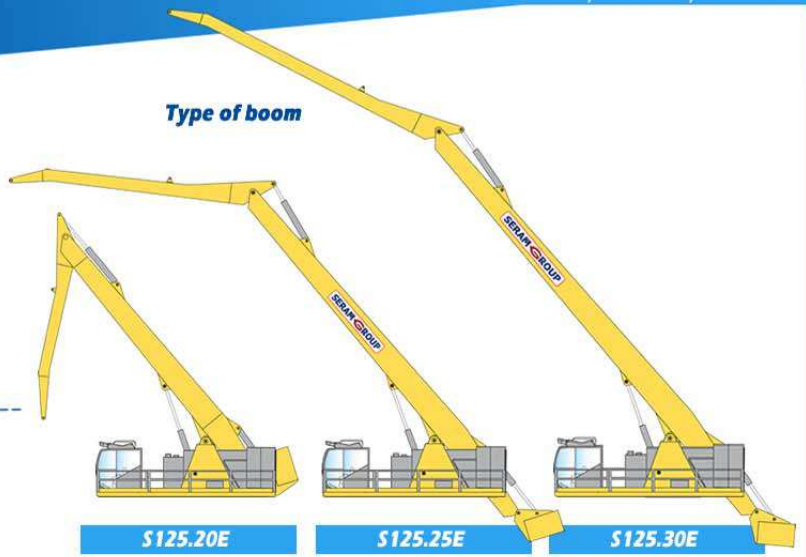

S125.20E | S125.25E | S125.30E

Type of tools

Grapple

Clamshell

Electromagnet

Timber grapple

Type of engine

Electro-Hydraulic

Type of cabin

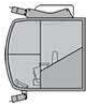
King 25

Power supply options

Diesel generator

Transformer

Cable reel

Type of supports

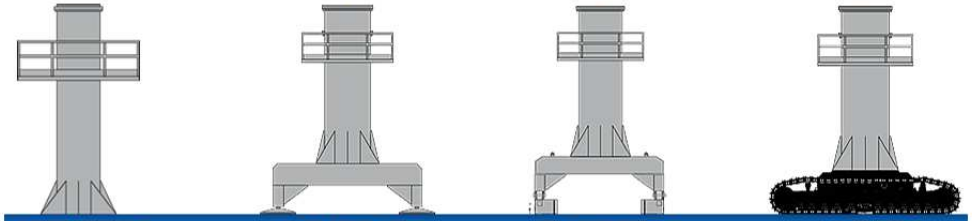

DIMENSIONS

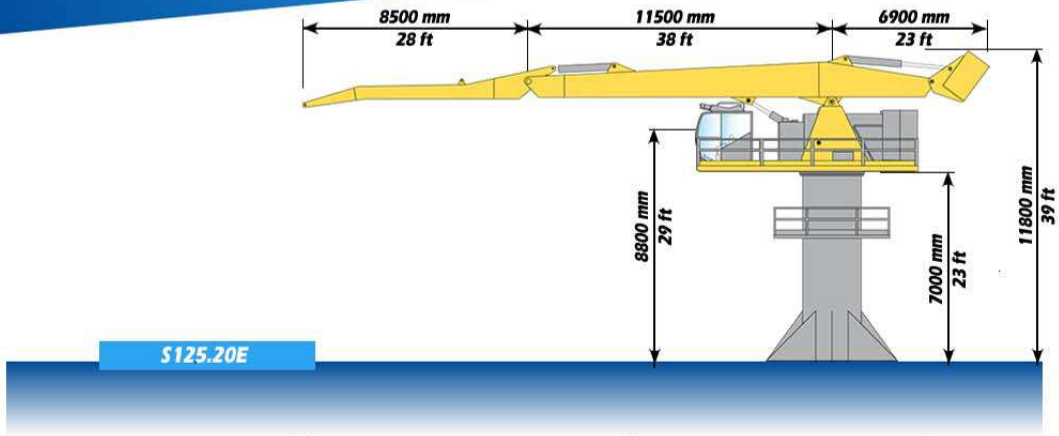

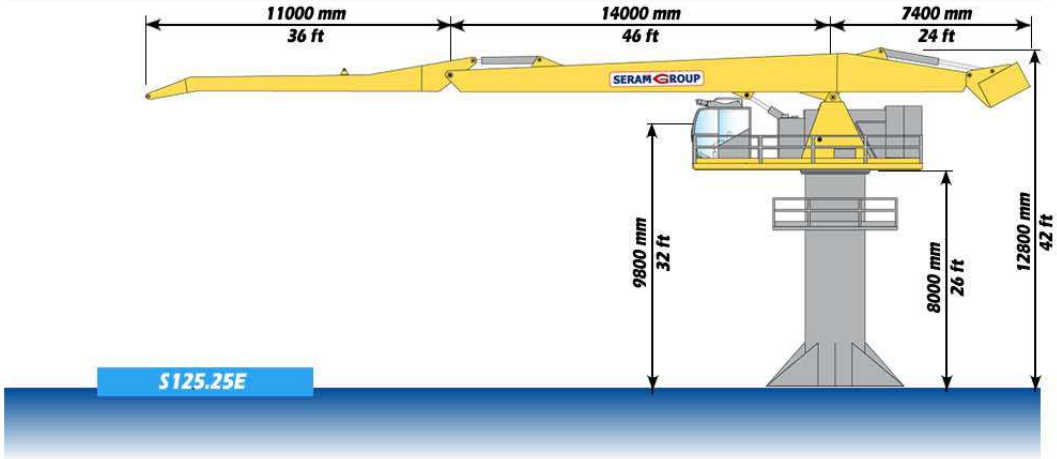

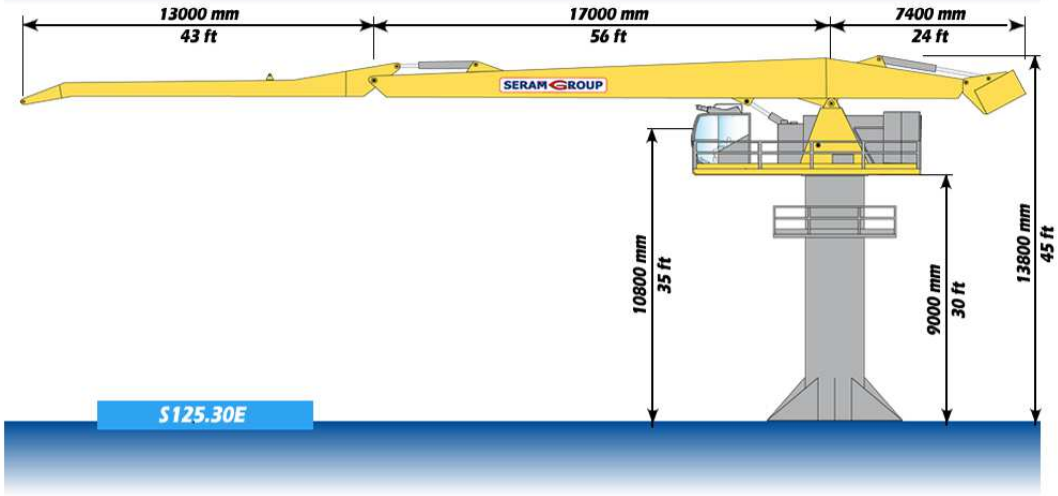

Courtesy of Crane.Market

EXAMPLES

S125

S125.20E / S125.25E / S125.30E

Courtesy of Crane Market

S125

S125.20E / S125.25E / S125.30E

Your dealer:

SERAM
SERAM SA
817 boulevard Marius Berliet - 66000 Perpignan (France)
Tél : 04 68 61 02 28 - seramsa@seram.net
WWW.SERAM.NET

DTE/PRO.TD.S125/EN/REV/20170103

Courtesy of Crane.Market