UpRight SL30N

SELF-PROPELLED LIFT

- 11.0m working height
- Large 1.5m x 4.2m platform
- Proportional joystick controls
- Electric or dual fuel power
- High gradeability
- Drivable with platform fully elevated

UpRight

Courtesy of Crane.Market

SL30N

SELF-PROPELLED LIFT

STANDARD FEATURES

- Proportional joystick controls
- Hour meter
- Fold Down Guardrails
- Tilt Alarm / Drive Cut-out
- Dual Disc Brakes
- Descent Alarm
- Wiring for power to platform
- Fully automatic 40amp battery charger with ammeter (electric model)

Specifications

Platform capacity (max.)	454 kg	1,000 lbs.
Platform size (inside)	1.46m x 4.22m	57.5in.x166.25in.
Weight- dual fuel **electric**	2,242 kg 2,391 kg	4,942 lbs. 5,272 kg
Working height	11.0 m	36 ft. 5in.
Platform height	9.0 m	30 ft.
Max. drive height	9.0 m	30 ft.
Stowed height	2.40 m	94.5 in.
Length	4.39 m	173 in.
Width	1.67 m	66 in.
Wheelbase	2.54 m	100 in.
Drive speed - maximum **with platform raised**	5.0 km/h 0.8 km/h	3.1 mph 0.5 mph
Gradeability - dual fuel **electric**	16 degrees 14 degrees	30 % 25 %
Inside turning radius	2.97 m	9 ft. 9 in.
Axle ground clearance **Chassis ground clearance**	200 mm 320 mm	7.75 in. 12.5 in.
Lift speed - raise/lower	23 sec./35 sec.	23 sec./35 sec.
Toeboards	152 mm	6 in
Guardrails fold down with gate	1.11 mm	43.5 in.

Control system	Proportional, single axis joystick with thumb rocker steering.
Power source	20 HP Kohler Dual Fuel. 2 cylinder, air cooled engine (gasoline/propane) or 2 24V DC electic motors, 8 6V 220 ampere hour batteries.
Tyres	B78-13ST slab.
Parking brake	Spring applied, hydraulic released.

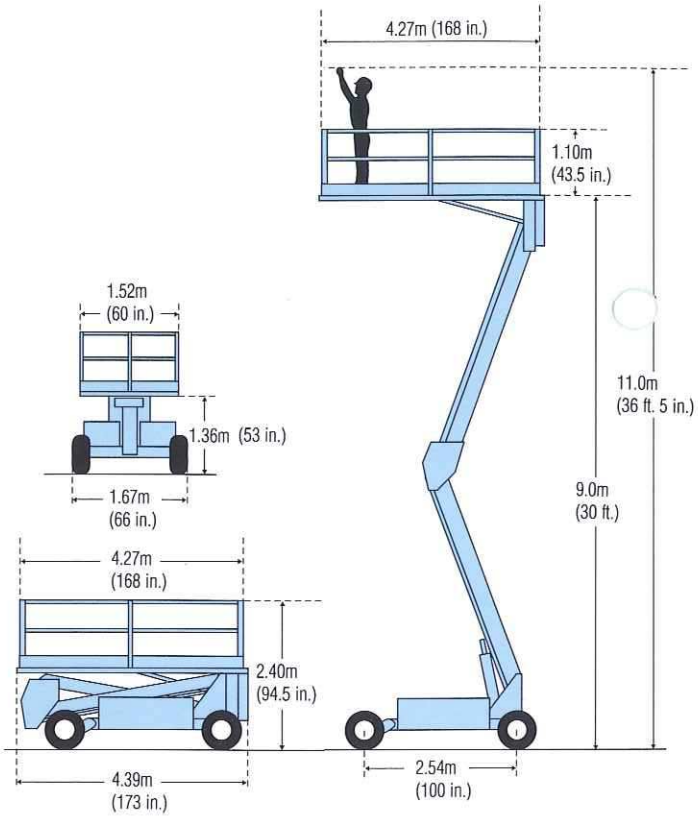

Options

- Kubota dual fuel engine, 3 cylinder, water cooled engine, 23
- 110V AC generator
- Flashing amber beacon/horn
- Poly filled slab or RT tyres
- Low voltage indicator for electric

Meets or exceeds applicable requirements of OSHA and ANSI **A92.6 - 1990.**

Specifications subject to change without notice. Photos and diagrams in this brochure are for promotional purposes only. Refer to appropriate UpRight Operator's manual for detailed instructions on the proper use and maintenance of this equipment.

Manufactured by
UpRight

INSTANT ZIP-UP

INSTANT ZIP-UP LTD.
AUDLEY AVENUE, NEWPORT, SHROPSHIRE TF10 7DP
Tel: (0952) 825815 Telex: 35610 INZIP G Fax: (0952) 825635

17446/3-94

17448/ENG/3-94

Courtesy of Crane.Market